E124

FAAC

INDEX

ENGLISH

E124 control unit

WARNINGS

- Important! For the safety of people, it is important that all the instructions be carefully observed.
- Incorrect installation or incorrect use of the product could cause serious harm to people.
- Carefully read the instructions before beginning to install the product and keep them for future reference.
- The symbol ⚠ indicates notes that are important for the safety of persons and for the good condition of the automated system.
- The symbol ☞ draws your attention to the notes on the characteristics and operation of the product.
- Before attempting any work on the control unit (connections, maintenance), always turn off power.
- Install, upstream of the system, a differential thermal breaker with adequate tripping threshold,
- Connect the earth cable to the relevant terminal.
- Always separate power cables from control and safety cables (push-button, receiver, photocells, etc.). To avoid any electrical disturbance, use separate sheaths or a screened cable (with the screen earthed).

ENGLISH

CE DECLARATION OF CONFORMITY

Manufacturer: FAAC S.p.A.
Address: Via Calari, 10 - 40069 Zola Predosa BOLOGNA - ITALY
Declares that: The E124 control unit

- ·conforms to the essential safety requirements of the following EEC directives

2006/95/EC Low Voltage Directive
2004/108/EC Electromagnetic Compatibility Directive

Additional note:
This product underwent tests in a typical uniform configuration
(all products manufactured by FAAC S.p.A.).

Bologna, 01 March 2014

The Managing Director
A.Marcellan

1. LAY-OUT OF ELECTRICAL BOX

The box contains the E124 control unit and the devices to power it. It must therefore be handled with care during all installation stages, to avoid damaging its components.

The dimensions of the box are shown in Fig. 1:

Fig. 2 shows the four 5 mm diam. holes for securing the box (ref.①) to the wall, the three fittings for installing the cable grippers M16/M20/M25 (ref. ②) and the two lid hinges (ref. ③).
If it is necessary to remove and re-position the E124 control board, make sure that the spacers (ref.④) are fitted in the supports.

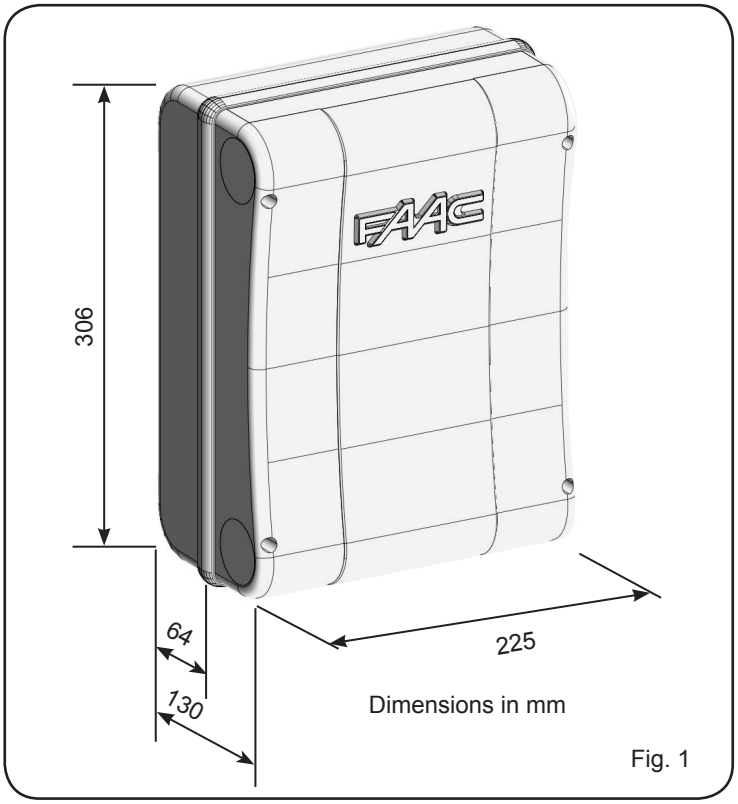

Fig. 1

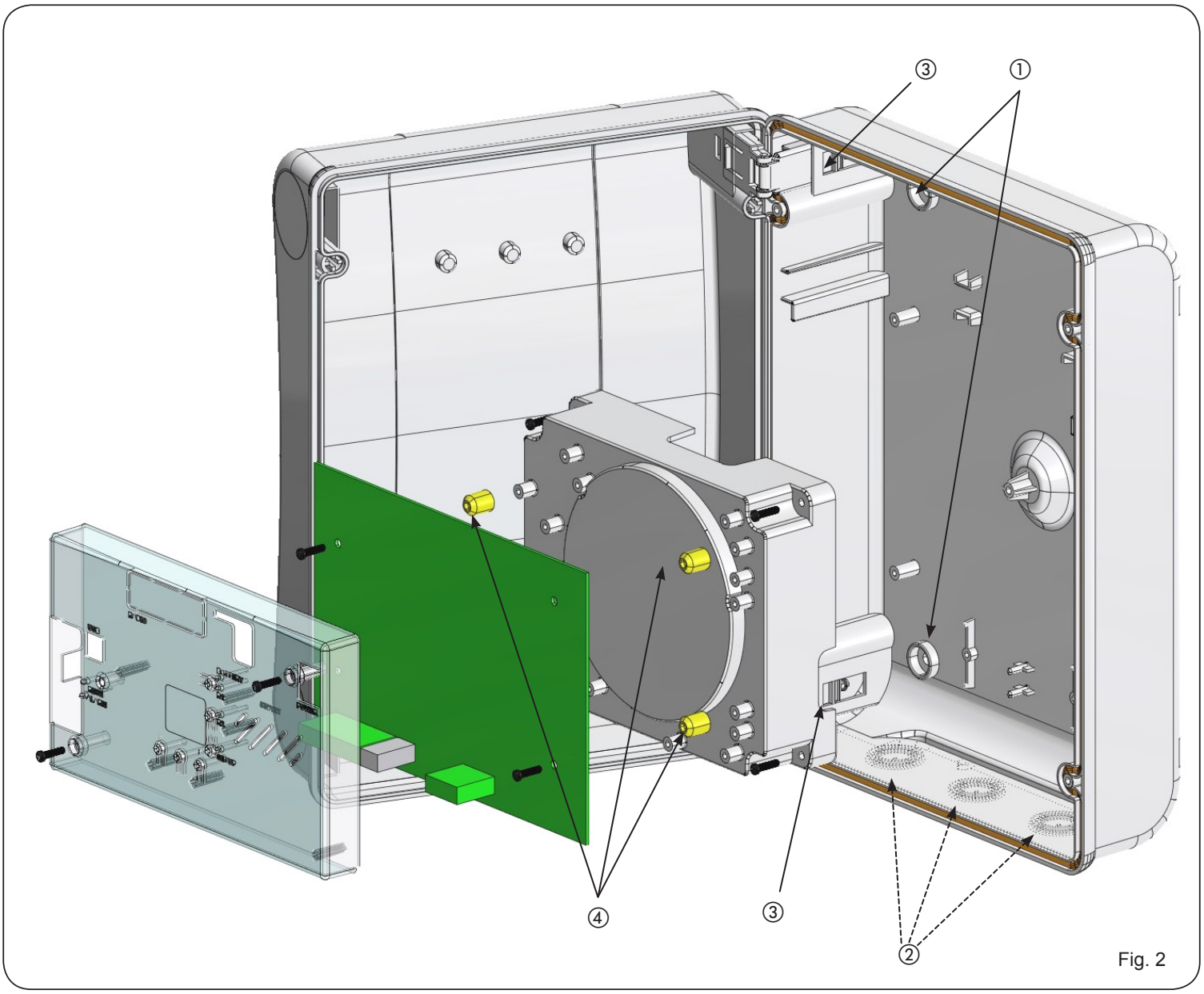

Fig. 2

ENGLISH

ENGLISH

The lid hinges can be moved upward to allow opening the box housing (Fig. 3): they can also be removed and re-positioned in order to enable the lid to open to the right or left.

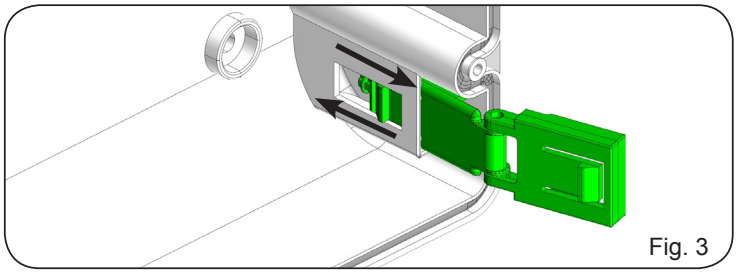

Fig. 3

When you have secured the box in the selected position, cover the securing holes (Fig. 2 ref. ①) and the screws with the supplied plugs as shown in Fig. 4.

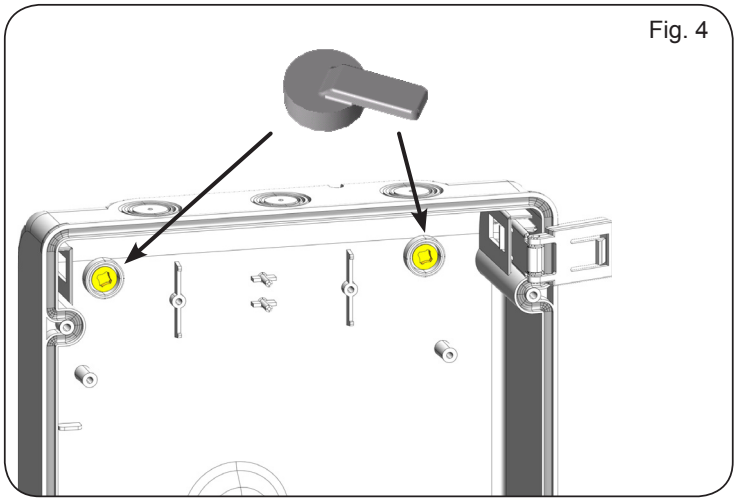

Fig. 4

Connect the power cable to the switching feeder as shown in Fig.5, making sure that there is an adequate thermal breaker upstream. Then plug the connector of the transformer to connector J1 on the board as indicated in fig.6.

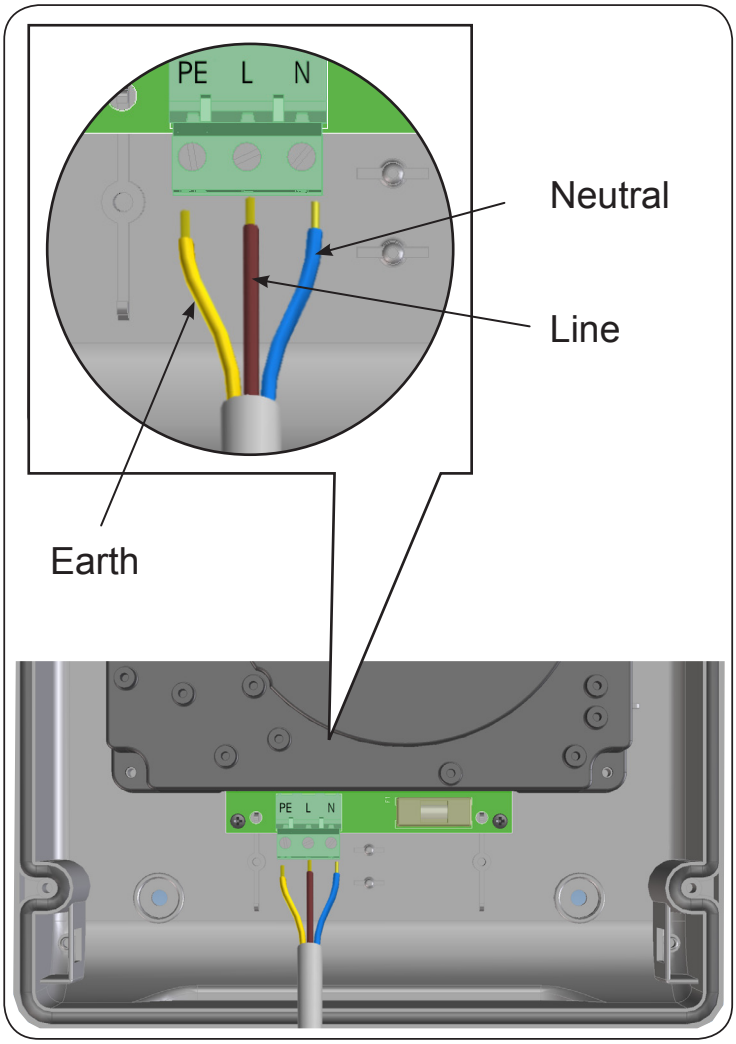

Fig. 5

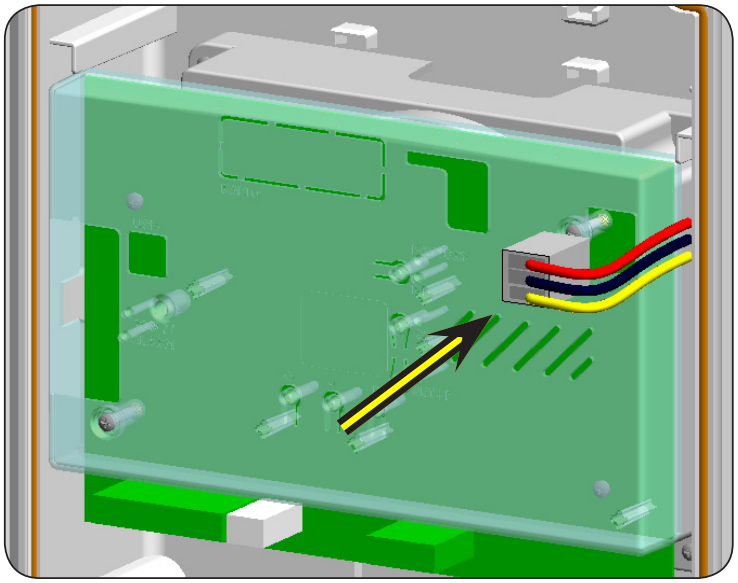

Fig. 6

2. LAYOUT AND COMPONENTS OF E124 BOARD

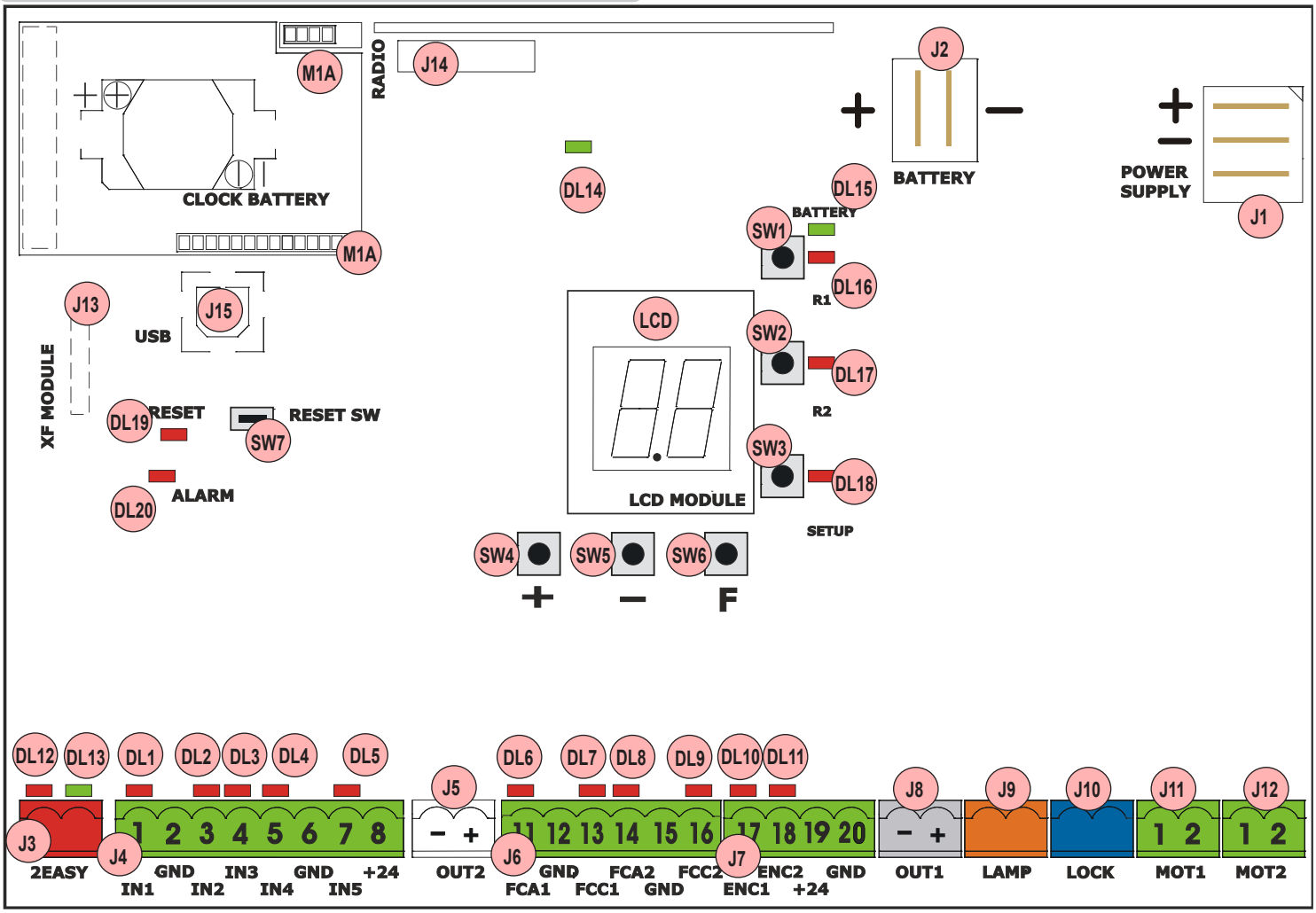

2.1. Description of components

LCD	SIGNALS AND PROGRAMMING DISPLAY
SW1	"**R1**" PROGRAMMING PUSH-BUTTON
SW2	"**R2**" PROGRAMMING PUSH-BUTTON
SW3	"**SETUP**" PUSH-BUTTON
SW4	"**+**" PROGRAMMING PUSH-BUTTON
SW5	"**-**" PROGRAMMING PUSH-BUTTON
SW6	"**F**" PROGRAMMING PUSH-BUTTON
SW7	"**RESET SW**" SOFTWARE RESET PUSH-BUTTON
DL1	INPUT STATUS CONTROL LED "**IN1**"
DL2	INPUT STATUS CONTROL LED "**IN2**"
DL3	INPUT STATUS CONTROL LED "**IN3**"
DL4	INPUT STATUS CONTROL LED "**IN4**"
DL5	INPUT STATUS CONTROL LED "**IN5**"
DL6	INPUT STATUS CONTROL LED "**FCA1**"
DL7	INPUT STATUS CONTROL LED "**FCC1**"
DL8	INPUT STATUS CONTROL LED "**FCA2**"
DL9	INPUT STATUS CONTROL LED "**FCC2**"
DL10	INPUT STATUS CONTROL LED "**ENC1**" (Gatecoder)
DL11	INPUT STATUS CONTROL LED "**ENC2**" (Gatecoder)
DL12	LED FOR DEVICE **BUS-2EASY** ACTIVE
DL13	LED FOR **BUS 2-EASY** DIAGNOSTICS
DL14	LED SIGNALLING PRIMARY POWER ON
DL15	LED SIGNALLING SECONDARY POWER ON

DL16	LED FOR "**SW1**" PUSH-BUTTON (**R1** PUSH-BUTTON)
DL17	LED FOR "**SW2**" PUSH-BUTTON (**R2** PUSH-BUTTON)
DL18	LED FOR "**SW3**" PUSH-BUTTON (**SETUP** PUSH-BUTTON)
DL19	PRESSURE SIGNALLING LED "**RESET SW**" PUSH-BUTTON
DL20	ALARM SIGNALLING LED "**ALARM**"
J1	POWER FEEDER SWITCHING CONNECTOR
J2	SECONDARY POWER SELECTOR
J3	CONNECTOR FOR CONNECTION TO BUS-2EASY DEVICES
J4	CONNECTOR FOR TERMINAL BOARD INPUTS
J5	CONNECTOR FOR OUT2 OUTPUT (see 2nd level prog.)
J6	TRAVEL LIMITS CONNECTOR
J7	CONNECTOR FOR LEAF 1 AND LEAF 2 ENCODER INPUTS
J8	CONNECTOR FOR OUT1 OUTPUT (see 2nd level prog.)
J9	FLASHING LAMP OUTPUT CONNECTOR
J10	CONNECTOR FOR ELECTRICAL LOCK OUTPUT
J11	LEAF 1 MOTOR CONNECTOR
J12	LEAF 2 MOTOR CONNECTOR
J13	CONNECTOR FOR RECEIVER MODULE XF433/XF868
J14	CONNECTOR: DECODER / MINIDEC / RP RECEIVER
J15	USB CONNECTOR FOR PROGRAMMING FROM PC
M1A	ACCESSORIES MODULE CONNECTOR

ENGLISH

2.2. Technical specifications

Primary power feed from mains	with switching power feed 230/115 V~ - 50/60 Hz
Secondary power feed	24 Vdc - 16 A max. (min. 20 Vdc. - max. 28 Vdc.)
Power absorbed from mains	stand-by = 4W max. ~ 400 W
Max. load for motor	7 A
Power feed for accessories	24 Vdc
Accessories max. current	24Vdc max. 500 mA BUS-2EASY max. 500 mA
Battery charge current	180 mA
Operating ambient tempeature	(-20 - +55) °C
Protective fuses for unit	All self resetting
Protective fuses for power pack	2.5 A
Function logics	Semiautomatic, Automatic, “step-by-step” Semiautomatic, Automatic with reverse during pause, Automatic step-by-step, Safety devices automatic, Safety devices step-by-step automatic, “b” Semiautomatic, mixed logic “bC”, Dead-man, Automatic with timer function
Work time	Programmable (from 0 to 9 min 50 sec)
Pause time	Programmable (from 0 to 9 min 50 sec)
Motor power	Programmable on 50 levels
Motor speed	Programmable on 10 levels
Connector inputs	Switching feeder, Battery, Decoder/Minidec/RP, X-COM, module XF433/868, USB
Terminal board inputs	BUS-2EASY, Inputs from IN1 to IN5, Travel limit device, Encoder.
Terminal board outputs	Flashing lamp, Motors, Electrical lock, OUT1, OUT2 (programmable), power feed to accessories
Programming	1st and 2nd lev. with 3 keys (+, -, F) and LCD display. 3rd lev. with PC connected via USB

To access PROGRAMMING FROM PC, connect the USB cable to the dedicated connector and consult the relative instructions.

2.3. Inputs default setting terminal board

Terminal-board J4

IN1	OPEN A	N.O. contact
IN2	OPEN B	N.O. contact
IN3	STOP	N.C. contact
IN4	FSW OP	N.C. contact
IN5	FSW CL	N.C. contact

Connector J13 – XF Module (OMNIDEC)

Channel 1	OPEN A
Channel 2	OPEN B

Connector J14 - Radio

Channel 1 RP	OPEN A
Channel 2 RP2	OPEN B

3. TERMINAL BOARDS, CONNECTORS, INPUTS AND SIGNALS

3.1. Power feed

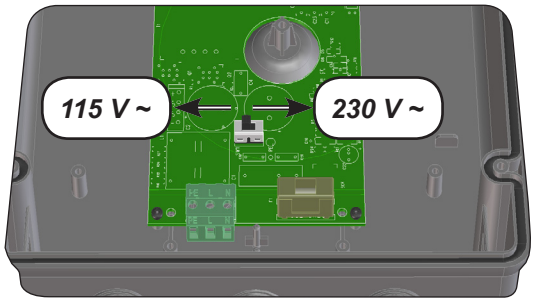

Fig. 7

J1: Select the correct power feed, by turning the power switching selector to its correct position (Default 230 Vac.)

To ensure correct operation, the switching feeder must be connected to the earth conductor in the system. Install an adequate differential thermal breaker upstream of the system.

3.2. Secondary power feed

J2: In the absence of a primary feed from the mains, the control unit can be fed by a secondary low voltage (24Vdc) power feed. Power can be supplied by a pack of batteries, recharged by a battery charger integrated in the board, or by a stabilised power feeder. In both cases, the power supply must have the following characteristics:

Voltage: (24 ± 4) Vdc
Current: 16 A max.

If you use an external stabilised feeder, you must disable the “battery charger” function via the PC (see dedicated instructions).

3.3. Terminal board J3 – BUS-2EASY accessories

Terminal for connection of BUS-2EASY accessories. see par. 4.2, 4.3, 6

3.4. Terminal board J4 – SIGNALS INPUTS

Connection of 2 N.O. contacts in parallel

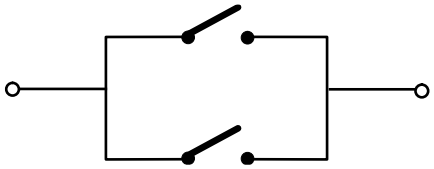

Fig. 8

***IN1* - OPEN A - "Opening" Command (N.O. - terminal 1):** this refers to any pulse generator (e.g.: push-button) which, by closing a contact, commands **TOTAL OPENING**.

To install several total opening pulse generators, connect the N.O. contacts in parallel

Other more detailed programming possibilities are feasible by programming with a PC (see dedicated instructions).

***IN2* - OPEN B - Partial Opening" command (N.O. - terminal 3):** this refers to any pulse generator (e.g.: push-button) which, by closing a contact, commands **PARTIAL OPENING**.

For single leaf systems, OPEN B commands an opening of leaf 1 (motor 1) corresponding to 50% of total opening

To install several partial opening pulse generators, connect the N.O. contacts in parallel

Other more detailed programming possibilities are feasible by programming with a PC (see dedicated instructions).

If you select one of the following logics (b, bC, C) input IN2 automatically becomes CLOSE (N.O).

Connection of 2 NC contacts in series

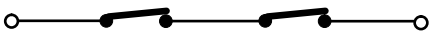

Fig. 9

IN3 - STOP contact command (N.C. - terminal 4): this refers to any device (e.g.: push-button) which, by opening a contact, can stop the motion of the automated system.

To install several STOP devices, connect the N.C. contacts in series.

Other more detailed programming possibilities are feasible by programming with a PC (see dedicated instructions).

If stop safety devices are not connected, jumper connect the STOP and GND terminals.

***IN4* - Opening safety-devices contact (N.C. - terminal 5):** see paragraph 4.1.

To install several opening safety devices, connect the N.C. contacts in series.

Other more detailed programming possibilities are feasible by programming with a PC (see dedicated instructions).

If opening safety devices are not connected, jumper connect terminals IN4 and GND, if the FAIL-SAFE safety device is not active, otherwise jumper connect IN4 and –OUT1.

***IN5* - Closing safety-devices contact (N.C. -. terminal 7):** see paragraph 4.1.

To install several closing safety devices, connect the N.C. contacts in series

Other more detailed programming possibilities are feasible by programming with a PC (see dedicated instructions).

If closing safety devices are not connected, jumper connect terminals IN5 and GND, if the FAIL-SAFE safety device is not active, otherwise jumper connect IN5 and –OUT1.

***GND* - (terminals 2-6): Negative for powering accessories**

***+24* - (terminal 8): Positive to power feed accessories**

The max. load of the accessories is 500mA, subdivided among terminal boards J4 and J7. To calculate maximum absorption, refer to the instructions for individual accessories.

3.5. Terminal boards J5, J8 – OUT1 AND OUT2

The two outputs can be set in one of the functions described in 2nd level programming (see par.7.2.). The default value is:

OUT1 = ALWAYS ACTIVE
OUT2 = INDICATOR LIGHT.

Maximum load applicable on every output: 24 Vdc with 100 mA.

3.6. Terminal board J6 – Opening and closing travel limit device

Terminal board for connection of the opening (FCA1 and FCA2) and closing (FCC1 and FCC2) travel limit device.

The travel limit contacts FCC1, FCA1, FCC2 and FCA2 are all NC contacts. See 2nd level programming for the various configurations applicable to the travel limit inputs.

If they are not used, do not jumper connect the contacts of the limit switches FCC1, FCA1, FCC2, FCA2

ENGLISH

ENGLISH

3.7. Terminal boards J7 - ENCODERS

Encoders with an open collector signal referred to earth (e.g. Gatecoder) can be connected to detect the leaf's angular position. For connections, see fig. 10.

The configuration indicated in the drawing is the maximum one. Only 1 Gatecoder can be used. In this case, the unused inputs do not have to be jumper connected to earth

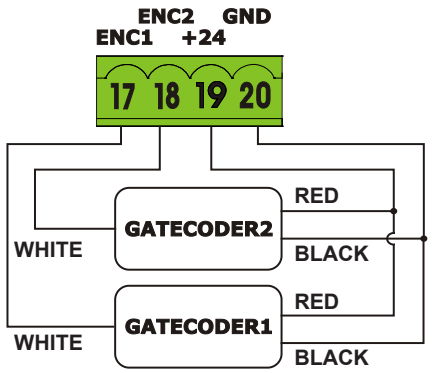

Fig. 10

3.8. Terminal board J9 – FLASHING LAMP

Output for 24Vdc flashing lamp

Maximum applicable load: 24 Vdc - 15 W

3.9. Terminal board J10 – ELECTRIC LOCK

Output for 12V ac or 24V dc electric lock

3.10. Motors terminal block

J11 (MOT1): Connection of motor connected to leaf 1, i.e. the leaf which opens first during an opening operation.

J12 (MOT2): Connection of the motor connected to leaf 2, i.e. the leaf which opens second.

If only one motor is connected, it must be connected to terminal J11 (MOT1).

If, during the first movement of the SETUP procedure, the leaves close instead of opening, the motor connection cables must be changed over.

3.11. Connector J13 – XF MODULE rapid connection

The control unit has an integrated 2-channel decoding system (DS, SLH, LC/RC) named OMNIDEC. This system makes it possible to save – through an extra receiver module – XF433 or XF868 radio commands of the same frequency, but of a different type (DS, SLH, LC/RC). It is possible to save both total opening (OPEN A) and partial opening (OPEN B) of the automated system, up to a maximum of 256 channels.

Other more detailed programming possibilities are feasible by programming with a PC (see dedicated instructions).

Fig. 11

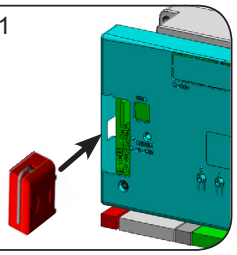

Insert and remove the boards only after cutting power.

3.12. Led operation

LED	Description	ON (contact closed)	OFF (contact open)
DL1	IN1 OPEN A	Command enabled	**Command disabled**
DL2	IN2 OPEN B	Command enabled	**Command disabled**
DL3	IN3 STOP	**Command disabled**	Command enabled
DL4	IN4 FSW OP	**Safety devices disabled**	Safety devices tripped
DL5	IN5 - FSW CL	**Safety devices disabled**	Safety devices tripped
DL6	FCA1	**Opening travel-limit devices free**	Opening travel-limit devices engaged
DL7	FCC1	Closing travel-limit devices free	**Closing travel-limit devices engaged**
DL8	FCA2	**Opening travel-limit devices free**	Opening travel-limit devices engaged
DL9	FCC2	Closing travel-limit devices free	**Closing travel-limit devices engaged**
DL10	ENC1	Flashing during operation (Gatecoder)	
DL11	ENC2	Flashing during operation (Gatecoder)	
DL12	SIGNALLING LED FOR DEVICE **BUS-2EASY** ACTIVE		
DL13	SIGNALLING LED FOR **BUS 2-EASY** DIAGNOSTICS		
DL14	LED SIGNALLING PRIMARY POWER ON		
DL15	LED SIGNALLING SECONDARY POWER ON		
DL16	LED FOR **"SW1"** PUSH-BUTTON (**R1** PUSH-BUTTON)		
DL17	LED FOR **"SW2"** PUSH-BUTTON (**R2** PUSH-BUTTON)		
DL18	LED FOR **"SW3"** PUSH-BUTTON (**SETUP** PUSH-BUTTON)		
DL19	LED **"RESET SW"** PUSH-BUTTON		
DL20	ALARM SIGNALLING LED "**ALARM**"		

Flashing LED ALARM indicates alarm in progress (a situation which does not prejudice gate operation)

LED ALARM on steady light indicates error in progress (a situation which blocks operation until cause of error is eliminated)

3.13. Connector J14- connection of MINIDEC, DECODER AND RP

It is used for rapid connection of Minidecs, Decoders and RP/RP2 Receivers. If you are using an RP2 twin-channel receiver, you will be able to directly command two different radio channels, OPEN A and OPEN B of the automated system from a twin-channel radio control.

If using a single-channel Minidec, Decoder or RP, you can command only one radio channel, OPEN A.

Fit the accessory with the components side directed toward the board interior.

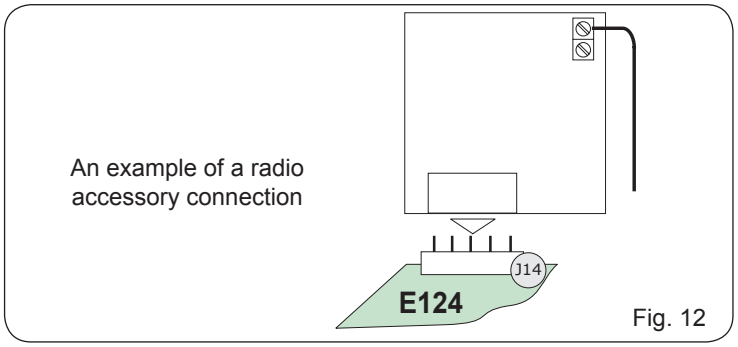

Fig. 12

⚠ ***Insert and remove the boards only after cutting power.***

☞ ***Other more detailed programming possibilities are feasible by programming with a PC (see dedicated instructions).***

4. ELECTRICAL CONNECTIONS

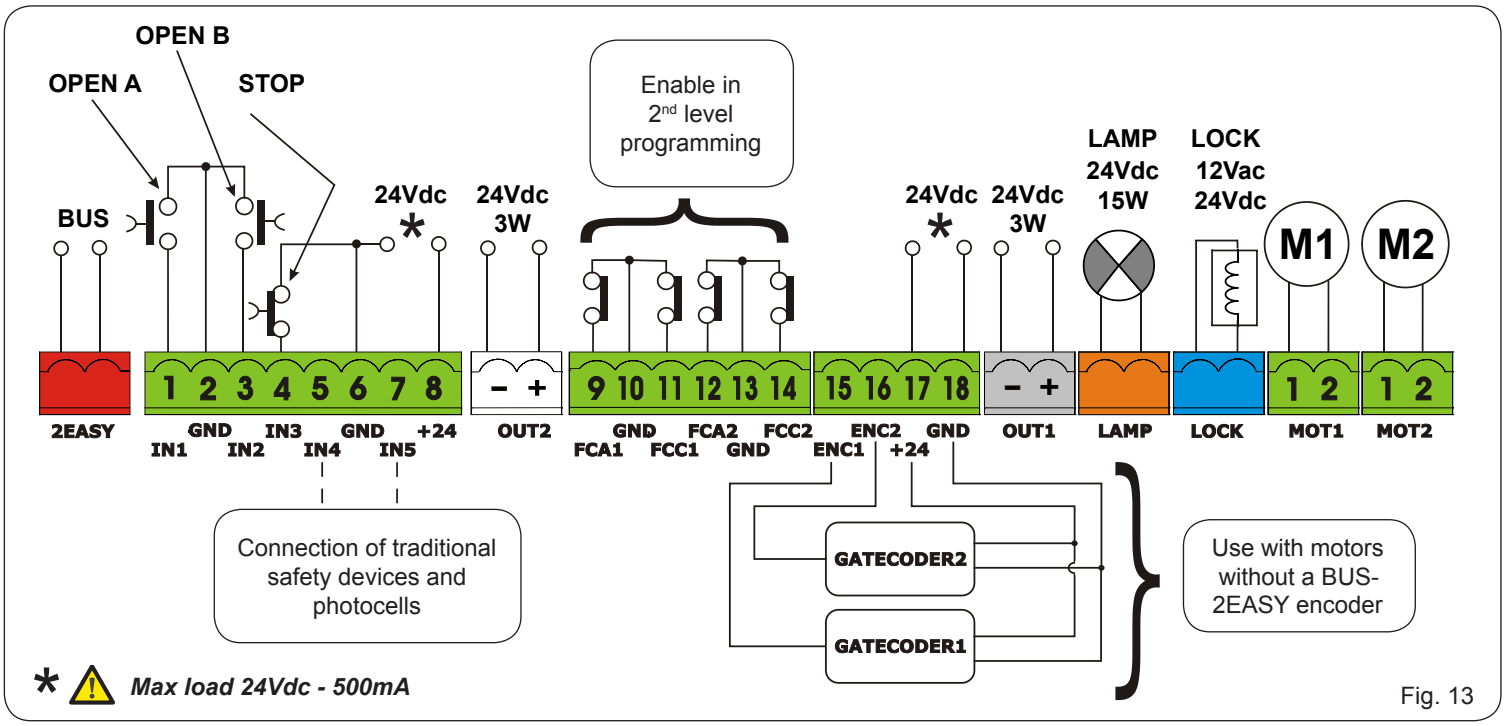

* ⚠ ***Max load 24Vdc - 500mA***

Fig. 13

With the E124 control unit, you can use both traditional photocells (N.C. contact with relay) and/or photocells with BUS-2EASY (open collector contact). The positioning of the photocells and their operation is schematised in Fig. 14.

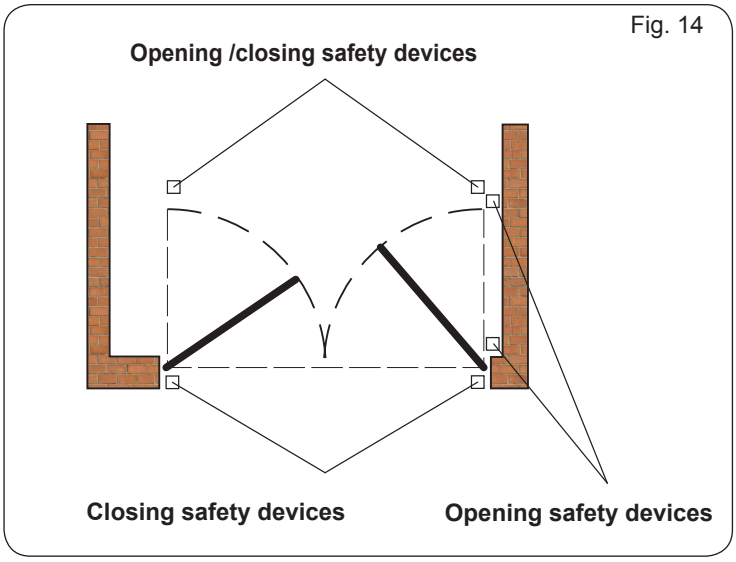

Fig. 14

4.1. Connection of traditional safety devices

Before you connect the photocells we advise you to select the type of operation according to the movement zone they have to protect:

Closing safety devices: they are tripped only during the automated system closing movement, and, therefore, are suitable for protecting the closure zone against the risk of impact.

Opening safety devices: they are tripped only during the automated system opening movement, and, therefore, are suitable for protecting the opening zone against the risk of impact.

Opening /closing safety devices: they are tripped during the automated system opening and closing movement, and, therefore, are suitable for protecting the entire movement zone against the risk of impact.

ENGLISH

Connection of no safety and stop device

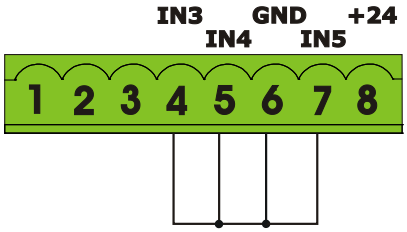

Fig. 15

Connection of 1 pair of closure photocells with FAIL-SAFE **activated**

Set o1 = 01 in the second programming level

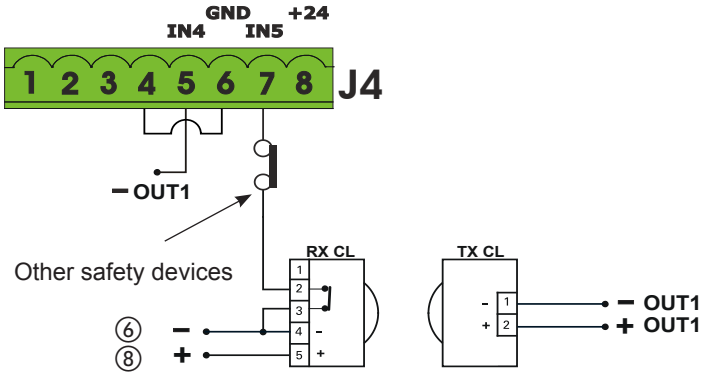

Connection of 1 pair of closure photocells with FAIL-SAFE and STOP **de-activated**

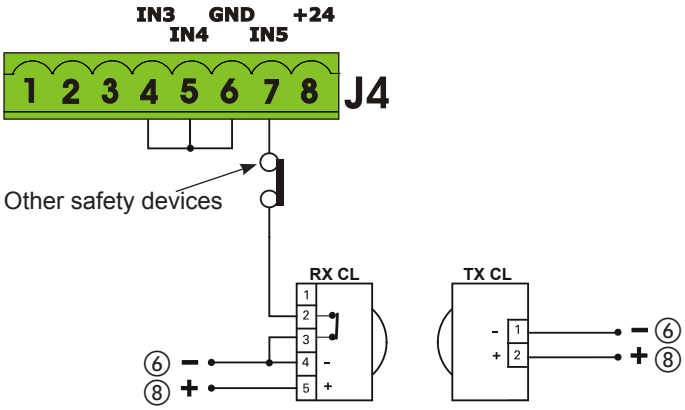

Fig. 16

Connection of a pair of closing photocells and a pair of opening/closing photocells with **disabled** FAIL-SAFE safety device and STOP

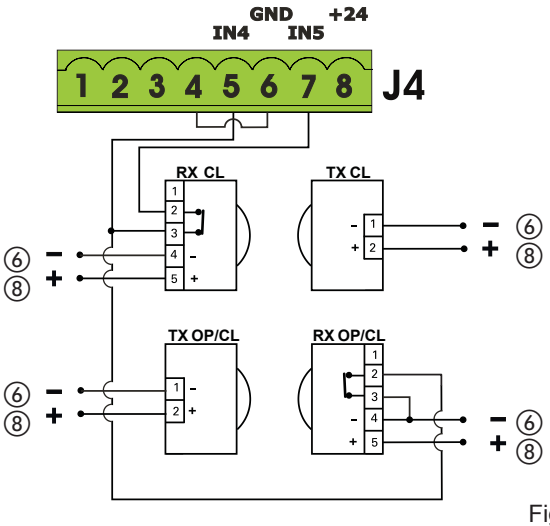

Fig. 17

Connection of 2 pairs of photocells

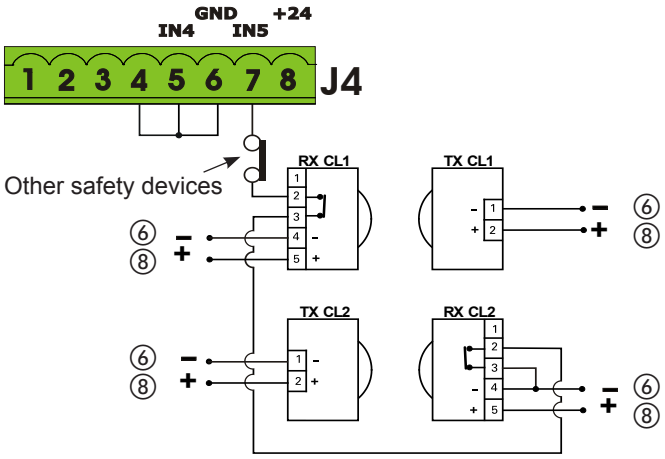

Fig. 18

Connection of 1 pair of opening photocells

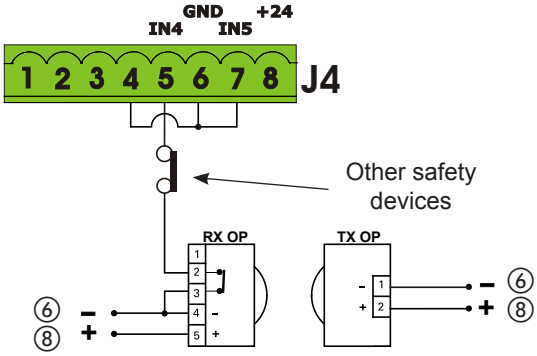

Fig. 19

Connection of one closing safety device and one opening safety device

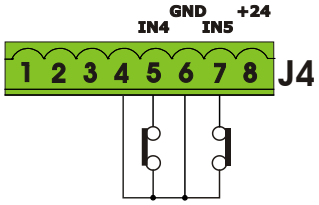

Fig. 20

If you do not use the FAILS-SAFE device, you must connect the transmitters power feed to terminals 6 and 8 of J4.

If you use the FAIL-SAFE device, connect the transmitters power feed to OUT1 after you have set it appropriately (see 2nd level programming and fig. 16).

If you use the FAIL-SAFE device, the non-used safety inputs too must be jumper connected to the OUT1 negative (see Fig.16).

Connection of a pair of closing photocells, a pair of opening photocells and a pair of opening/closing photocells

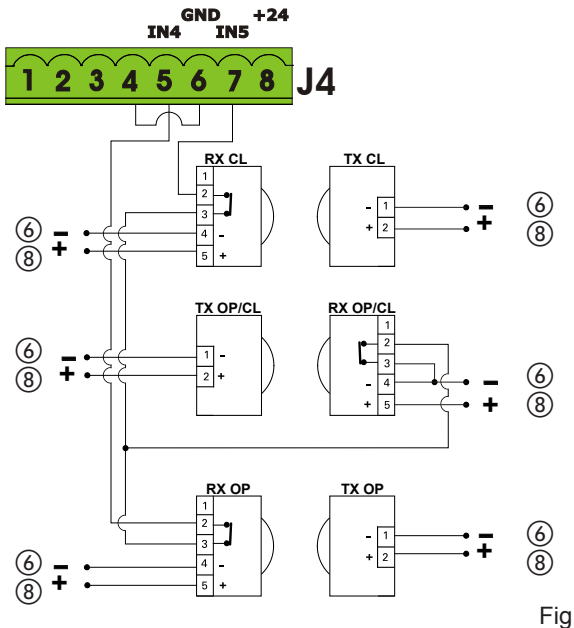

Fig. 21

Connection of a pair of opening and a pair of closing photocells

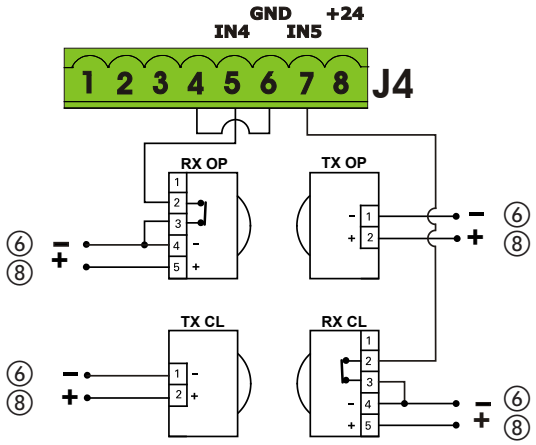

Fig. 22

4.2. Photocells BUS-2EASY

This board is supplied with a **BUS-2EASY** circuit enabling easy connection of a high number of BUS-2EASY safety auxiliary devices (e.g. up to 16 photocells pairs), appropriately programmed, using only two cables without polarity.
Before connecting the photocells, we advise you to select the type of operation (Fig.23) according to the movement zone they must protect and position – **both on the transmitter and receiver** - the dip-switches as shown in Tab.1:

Closing photocells: they are tripped only during the automated system closing movement, and, therefore, are suitable for protecting the closure zone against the risk of impact.

If you have to connect two or more BUS-2EASY closing photocells, choose different addresses for each pair used.

Opening photocells: they are tripped only during the automated system opening movement, and, therefore, are suitable for protecting the opening zone against the risk of impact.

If you have to connect two or more BUS-2EASY opening photocells, choose different addresses for each pair used.

Opening /Closing photocells: they are tripped during the automated system opening and closing movement, and, therefore, are suitable for protecting the entire movement zone against the risk of impact.

If you have to connect two or more BUS-2EASY closing photocells, choose different codes for each pair used.

Pulse generators: used as pulse generators to open the automated system.

A maximum of 16 pairs of BUS-2EASY photocells can be connected to the board.
The photocells are split into groups:

Opening photocells:	max 6
Closing photocells:	max 7
Opening /Closing photocells:	max 2
Photocell used as an OPEN pulse:	max 1

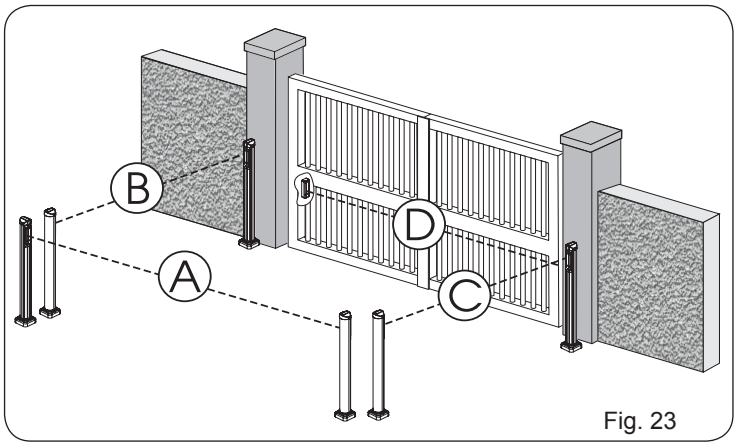

Fig. 23

Fig. 24 shows a 2-swing leaf automated system indicating the coverage beams of the photocells:
A: Photocells with OPENING and CLOSING action
B: Photocells with OPENING action
C: Photocells with OPENING action
D: Photocells with CLOSING action

ENGLISH

ENGLISH

4.2.1. Addressing the BUS-2EASY photocells

Important: the same address must be given to both transmitter and receiver (the same DIP-SWITCH setting)

Make sure that there are not two or more photocell pairs with the same address. (the same DIP-SWITCH setting)

If you are not using any BUS-2EASY accessory, leave free connector BUS-2EASY (J3- fig. 7).

The following table shows the programming operations of the dip-switch inside the transmitter and the BUS 2-EASY photocells receiver.

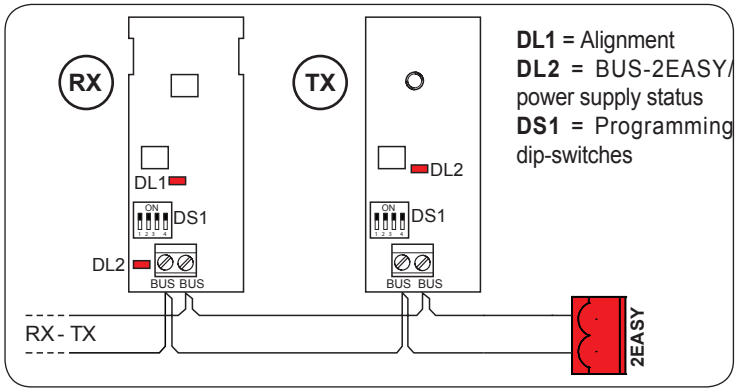

Dip1	Dip2	Dip3	Dip4	Rif.	Type
OFF	OFF	OFF	OFF	B - C	OPENING
OFF	OFF	OFF	ON		
OFF	OFF	ON	OFF		
OFF	OFF	ON	ON		
OFF	ON	ON	OFF		
OFF	ON	ON	ON		
ON	OFF	OFF	OFF	D	CLOSING
ON	OFF	OFF	ON		
ON	OFF	ON	OFF		
ON	OFF	ON	ON		
ON	ON	OFF	OFF		
ON	ON	OFF	ON		
ON	ON	ON	OFF		
OFF	ON	OFF	OFF	A	OPENING and CLOSING
OFF	ON	OFF	ON		
ON	ON	ON	ON	/	OPEN PULSE

Other more detailed programming possibilities are feasible by programming with a PC (see dedicated instructions).

4.3. Addressing the BUS-2EASY encoders

Connection of the BUS-2EASY input in the control board is via the bipolar cables which come out of the encoders.

Unlike the case of the photocell devices, the polarity of the BUS-2EASY line connection determines whether the encoder belongs to one leaf rather than to the other.

This is why you must pay great attention to the indications of the status LEDs on the body of each encoder (Fig. 24-25).
Below we list the functions of LEDs DL1, DL2, and DL3, and their statuses:

Encoder connection and LED status

LED	ON	FLASHING	OFF
DL 1	Power ON and BUS -2EASY communicating with board	Power ON but BUS-2EASY not communicating	No power to or communication with BUS-2EASY
DL 2	Leaf 1 encoder	/	Leaf 2 encoder
DL 3	Leaf not moving	Pulses read while leaf moving	Leaf not moving

DL 1 must always be lighted to guarantee correct connection between encoder and board.

DL 2 determines the leaf on which the encoder is installed. Providing the configuration is correct, the automated system will show: an encoder with DL2 lighted in leaf 1, and an encoder with DL2 OFF in leaf 2. If there is an incorrect connection, i.e. indicating two encoders with the same status of the DL2 LEDs, during the learning procedure of the BUS-2EASY accessories, the DL 1 LEDS of both encoders show a FLASHING status. In this situation, refer to the configuration in TAB.4 to define which encoder connection to rotate.

DL 3 indicates, on a steady flashing beam, the reading of the pulses while the leaf is moving. When the leaf is motionless, DL 3 can be either lighted or OFF.

4.3.1. Encoder wiring for operator S700H/S800H

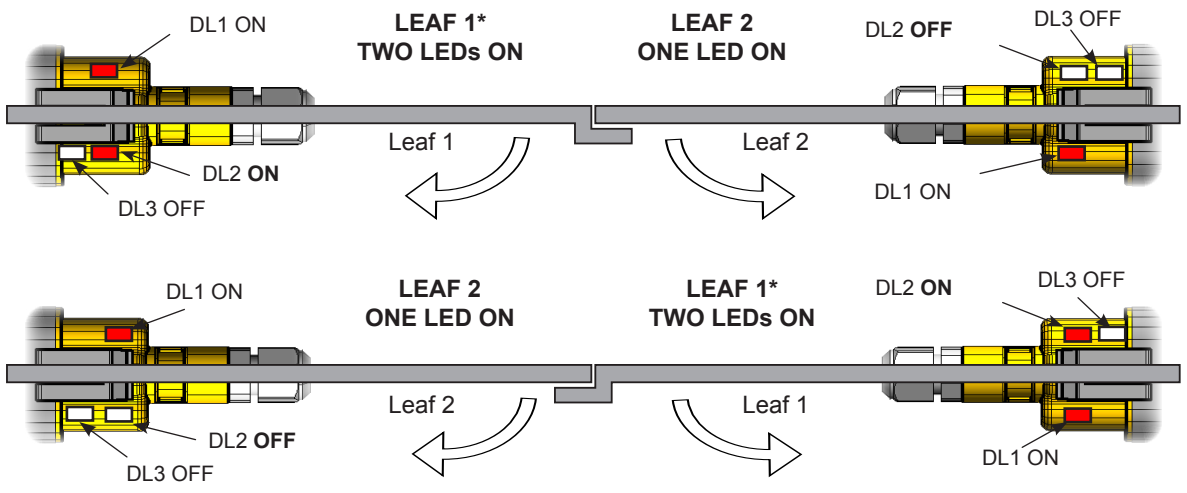

** Leaf 1 opens as first and closes as second. If no rebate is present between leaf 1 and 2, set leaf delay to zero on the control board.*

Reverse the encoder wires to exchange between the encoder associated with leaf 1 and the encoder associated with leaf 2 and vice versa

Fig. 24

ENGLISH

4.3.2. SAFECODER wiring (Operators 412, 413, 415, 770N, S450H)

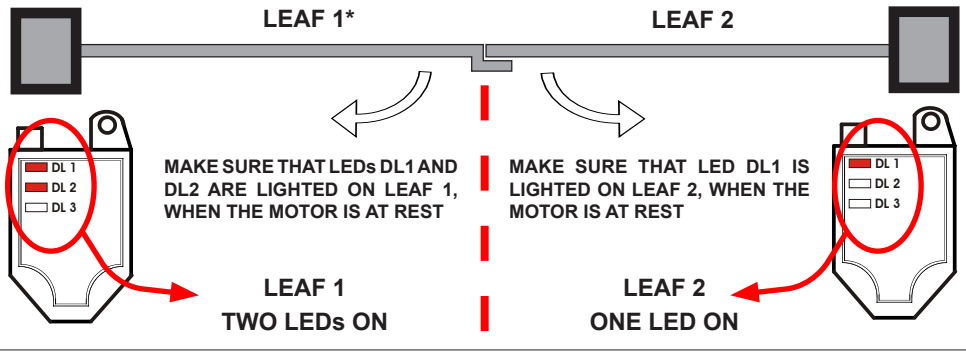

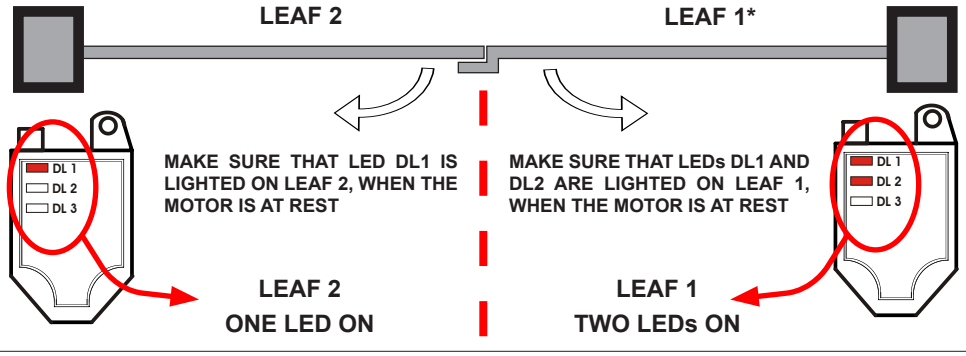

Fig. 25

ENCODER WIRES REVERSING OPERATION Fig. 26

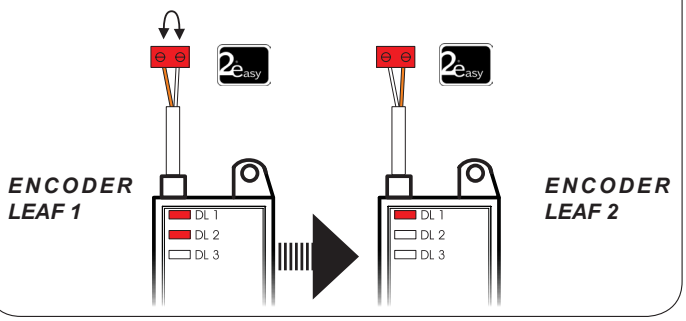

** Leaf 1 opens as first and closes as second. If there is no rebate between leaf 1 and 2, set the leaf delay to zero on the control board.*

Reverse the encoder wires to exchange between the encoder associated with leaf 1 and the encoder associated with leaf 2, and vice versa

5. PROGRAMMING

Programming is divided in two levels:

- **BASIC programming**
- **ADVANCED programming**

The programming phases are (see **Tab.**):

1. to access PROGRAMMING (**1A** or **1B**);
2. to show the set values and modify them, if you want. *Changing the values is effective immediately, while the final memorisation must be carried out upon exiting programming* (St).
3. exit the programming by using St function. Select y to SAVE the configuration you just performed, otherwise select no to EXIT WITHOUT SAVING any changes.

You can **EXIT programming at anytime**:

- press and hold **F** and then also **–** to switch directly to St.

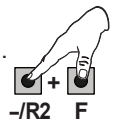

This board also allows **programming using a PC** or **MAC**.
This programming requires connection to PC/MAC via USB cable and USB-B relevant port.
The programming SOFTWARE with relevant instructions, must be downloaded from the website:

www.faacgroup.com

The programming using a PC/MAC, with the **default PASSWORD** does not inhibit the programming by board. The writing PC will be displayed in correspondence with the modified values. **Notes**: when you modify the values by board the previous PC/MAC programming will be overwrote.

The default password is 0000.

The programming using a PC/MAC, with a modified PASSWORD (different from the default one), will inhibit the programming by board. If one of the buttons is pressed, the display will show PC programming for 5 sec and changes will be allowed only by PC /MAC.

	❶	❷			❸
BASIC PROGRAMMING	**1A.** PRESS AND HOLD **F** : THE FIRST FUNCTION APPEARS [1] 	RELEASE **F**: THE FUNCTION VALUE IS DISPLAYED 	USING ✚ OR ➖, SCROLL THE AVAILABLE VALUES UNTIL THE THE DESIRED ONE	PRESS **F**: TO MOVE TO THE NEXT FUNCTION [1] 	FUNCTION St (LAST BASIC OR ADVANCED FUNCTION)
ADVANCED PROGRAMMING	**1B.** PRESS AND HOLD **F** AND THEN ALSO ✚ : THE FIRST FUNCTION APPEARS [1] 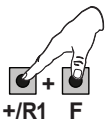	RELEASE THE KEYS: THE FUNCTION VALUE IS DISPLAYED 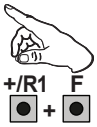			SELECT y TO SAVE THE PROGRAMMING OTHERWISE SELECT no TO EXIT THE PROGRAMMING WITHOUT SAVING

[1] *THE FUNCTION IS DISPLAYED UNTIL YOU HOLD*

Tab. Programming phases.

5.1. Basic programming

Display	Basic Function	Default 0	Default 1	Default 2	Default 3	Default 4	Default 5
cF	0 Configures the parameters with DEFAULT values corresponding to an installation with non-FAAC operators. (see default column 0). 1 Configures the parameters with DEFAULT values corresponding to an installation with operators **FAAC 412, 413/415, 770, 390, 770N** (see default column 1). 2 Configures the parameters with DEFAULT values corresponding to an installation with operators **FAAC 391** (see default column 2). 3 Configures the parameters with DEFAULT values corresponding to an installation with operators **FAAC S700H/ S800H** (see default column 3. 4 Configures the parameters with DEFAULT values corresponding to an installation with operators **FAAC 418.** (see column default 4). 5 Configures the parameters with DEFAULT values corresponding to an installation with operators **FAAC S450H** (see column default 5). PC Mixed configuration from a PC/MAC ☞ ***At the time of changing the set motor type on the board, the relevant defaults are uploaded.***	0	1	2	3	4	5
dF	**DEFAULT:** y indicates that all the set values correspond to the default values. no indicates that one or more set values are different from the default. Set y if you want to restore the default settings.	y	y	y	y	y	y
LO	**FUNCTION LOGICS:** E Semi-automatic EP Semi-automatic Step-by-Step S Automatic Safety Devices SA Automatic with reversal during pause SP Automatic Step-by-Step Safety Devices AI Automatic 1 A Automatic AP Automatic Step-by-Step At Automatic timer b Semi-automatic “b” bC Mixed (Pulses for opening / Dead-man commands for closing) C Dead-man CU Logic modified from a PC/MAC ☞ ***Other more detailed programming possibilities are feasible by programming with a PC (see dedicated instructions).***	E	E	E	E	E	E

ENGLISH

ENGLISH

Display	Basic Function	Default 0	Default 1	Default 2	Default 3	Default 4	Default 5
PA	**PAUSE TIME A (visualised only if the selected logic allows automatic reclosing):** Pause time following a **TOTAL** opening command. It has only effect if a logic with pause time was selected. Can be adjusted from 0 to 59 sec. in one-second steps. Next, the viewing changes in minutes and ten seconds (separated by a dot) and time is adjusted in 10-second steps, up to the maximum value of 9.5 minutes. *E.g.: if the display shows 2.5, the pause time will be 2 min. and 50 sec.*	30	30	30	30	30	30
Pb	**PAUSE TIME B (visualised only if the selected logic allows automatic reclosing):** Pause time following a **PARTIAL** opening command. It has only effect if a logic with pause time was selected.	30	30	30	30	30	30
Mn	**NR. OF MOTORS:** You can select the number of motors present in the system: 1 = 1 motor 2 = 2 motors ☞ ***If the SETUP is performed with only one motor, and later two motors are used, the board will signal error 14 - configuration error, which can be deleted by repeating the SETUP with two motors or by returning to one motor.*** ***If a SETUP is performed with two motors and later only one is used, the board will not signal an error. Only the motor connected to input M1 will move.*** ***When programming from a PC/MAC, you can select different partial openings.***	02	02	02	02	02	02
F1	**MOTOR 1 POWER :** You can adjust the maximum power of motor 1, which is the same during both opening and closing. 01 = minimum power 50 = maximum power ☞ ***If the power is modified, we recommend performing a new SETUP - see the related paragraph.*** ☞ ***Other more detailed programming possibilities are feasible by programming with a PC (see dedicated instructions).***	25	25	25	40	25	35
F2	**MOTOR 2 POWER (visualised only with the function Mn = 2):** You can adjust the maximum power of motor 2, which is the same during both opening and closing.	25	25	25	40	25	35
SP	**SPEED:** Adjusts the motion speed of the motors. There are 10 levels. The value is relative and not absolute, because the speed value refers to the weight of the leaf measured during the SETUP cycle 01 = minimum speed 10 = maximum speed ☞ ***Other more detailed programming possibilities are feasible by programming with a PC (see dedicated instructions).***	08	08	08	08	08	08

Display	Basic Function	Default 0	Default 1	Default 2	Default 3	Default 4	Default 5
En	**ENCODER USE:** You can enable/disable the use of encoders (both BUS and GATECODER encoders): y = encoders on both motors no = encoders disabled ☞ ***When using configurations 3 or 5 it is mandatory to use the encoder, no is not selectable***	no	no	no	y	no	y
FA	**LIMIT SWITCH WHEN OPENING:** Lets you set or disable use of the opening limit switch on swing-leaves . no = opening limit switches disabled 01 = the limit switch determines the stopping of motion 02 = the limit switch determines the start of deceleration ☞ ***After having changed the value of this function, SETUP is required: the card will signal error 14 (configuration error) until the SETUP is performed again or until the previous value is restored***	no	no	no	no	no	no
FC	**LIMIT SWITCH WHEN CLOSING:** Lets you set or disable use of the closing limit switch on swing-leaves. no = closing limit switches disabled 01 = the limit switch determines the stopping of motion 02 = the limit switch determines the start of deceleration ☞ ***After having changed the value of this function, SETUP is required: the card will signal error 14 (configuration error) until the SETUP is performed again or until the previous value is restored.***	no	no	no	no	no	no
Cd	**DELAY FOR CLOSING LEAF (visualised only with the function Mn = 2):** Is the delay time for starting leaf 1 closing with respect to leaf 2. Makes it possible to avoid overlapping of the two leaves. Adjustable from 00 to 59 sec, in 1- second steps. Next the value 59, the viewing changes to minutes and tenths of a second (separated by a decimal point) and time is adjusted in 10-second steps up to the maximum value of 3 minutes. *e.g.: if the display shows 1.2, the time is 1 min and 20 sec*	05	05	05	05	05	05
bu	**BUS-2EASY DEVICES ENTRY:** *See the related paragraph.*	no	no	no	no	no	no
M2	**MOTOR 2 dead-man DRIVE mode (visualised only with the function Mn = 2)** +/R1 OPENS (visualising oP) until the button is held down -/R2 CLOSES (visualising cL) until the button is held down	--	--	--	--	--	--

ENGLISH

ENGLISH

Display	Basic Function	Default 0	Default 1	Default 2	Default 3	Default 4	Default 5
M1	**MOTOR 1 dead-man DRIVE mode** **+/R1** OPENS (visualising oP) until the button is held down **-/R2** CLOSES (visualising cL) until the button is held down	--	--	--	--	--	--
tL	**WORK TIME LEARNING (SETUP):** *See the related paragraph.*	--	--	--	--	--	--
St	**AUTOMATED SYSTEM STATUS:** You can exit programming, choosing whether or not to save the configuration you just performed. 1. set the choice: y to SAVE and EXIT the programming no to EXIT the programming WITHOUT SAVING 2. press the button **F** to confirm; at the end the display returns to visualize the **automated system status**: 00 = CLOSED 01 = OPEN 02 = Stationary then “OPENS” 03 = Stationary then “CLOSES” 04 = In “PAUSE” 05 = during Opening 06 = during Closing 07 = FAIL SAFE in progress 08 = checking BUS-2EASY devices in progress 09 = Pre-flash then “OPENS” 10 = Pre-flash then “CLOSES” 11 = Emergency open 12 = Emergency close HP = Hold position ⚠ ***WARNING If power is lost to the board prior to confirmation (step 2.), all changes made will be lost.*** *You can EXIT programming at any time: press and hold* **F** *and then also* **–** *to switch directly to* St. –/R2 + F						y

5.2. Advanced programming

Display	Advanced Function	Default 0	Default 1	Default 2	Default 3	Default 4	Default 5
bo	**TIME OF MAXIMUM POWER AT STARTING:** You can set the starting time. During start the motors work at maximum power for starting the movement. Adjustable from 00 to 10 sec, in 1-second steps (ignoring the power level selected with F1 and F2). ***Other more detailed programming possibilities are feasible by programming with a PC (see dedicated instructions).***	02	02	02	02	02	02
cS	**FINAL STROKE WHEN CLOSING (RAM STROKE) (NOT displayed if function FC = 1):** Lets you enable/disable the ram stroke on swing-leaves. The ram stroke facilitates latching of the electric lock by activating the motors at maximum power during final closing. y = enabled (for 2 sec) no = disabled ***In case of systems with an absolute encoder, to enable this function a setup must be performed using the automatic leaf stop on the mechanical contact point.***	no	no	no	no	no	no
rS	**REVERSE STROKE WHEN OPENING displayed if function FA = 1):** Lets you enable/disable the reverse stroke on leaf doors. The reverse stroke facilitates unlatching of the electric lock. When the automatic system is closed, before starting to open, the motors give a brief push to close. y = enabled (for 2 sec) no = disabled ***In case of systems with an absolute encoder, to enable this function a setup must be performed using the automatic leaf stop on the mechanical contact point.***	no	no	no	no	no	no
EL	**ELECTRIC LOCK ON LEAF 2:** The board has a terminal dedicated to the connection of an electric lock. Normally the electric lock must be connected to leaf 1. If the electric lock is located on leaf 2, adjust the parameter. This parameter does not allow the setting y if Mn = 2) y = electric lock on leaf 2 no = electric lock on leaf 1	no	no	no	no	no	no
Od	**DELAY FOR OPENING LEAF (visualised only with the function Mn = 2):** You can set the delay time for starting leaf 2 opening with respect to leaf 1, in order to avoid overlapping of the two leaves. Adjustable from 00 to 59 sec, in 1- second steps. Next the value 59, the viewing changes to minutes and tenths of a second (separated by a decimal point) and time is adjusted in 10-second steps up to the maximum value of 1.3 minutes. *e.g.: if the display shows 1.2, the time is 1 min and 20 sec.*	02	02	02	02	02	02

ENGLISH

ENGLISH

Display	Advanced Function	Default 0	Default 1	Default 2	Default 3	Default 4	Default 5
r1	**LEAF 1 DECELERATION:** You can adjust the deceleration space as a percentage of the total travel of leaf 1. Adjustable from 00 to 99 %, in 1% steps. 00 = no deceleration 01 = minimum deceleration space 99 = maximum deceleration space	30	30	30	20	30	30
r2	**LEAF 2 DECELERATION (visualised only with the function Mn = 2):** You can adjust the deceleration space as a percentage of the total travel of leaf 2. Adjustable from 00 to 99 %, in 1% steps. 00 = no deceleration 01 = minimum deceleration space 99 = maximum deceleration space	30	30	30	20	30	30
PF	**PRE-FLASHING:** You can enable/disable the pre-flashing. Pre-flashing duration = 3 sec. You can choose: no = disabled OC = pre-flashing before each movement CL = pre-flashing before a closing movement OP = pre-flashing before an opening movement PA = pre-flashing only at the end of the pause time	no	no	no	no	no	no
Ph	**CLOSING PHOTOCELLS:** The intervention of closing photocells causes the reversing of automated system (opening). You can choose: y = operate the reversal only after the photocells are released no = operate the reversal immediately	no	no	no	no	no	no
Ad	**ADMAP FUNCTION:** Allows operation in compliance with French regulation NFP 25/362. y = enabled no = disabled	no	no	no	no	no	no
EC	**ANTI-CRUSHING SENSITIVITY:** Varying this function varies the amount of time after which, in case of obstacle, the board commands reversal of the leaves, or it will command a stop if the leaves are in the contact point search space (see the parameter r8). The fourth consecutive obstacle detected in the same direction and position will be defined as a contact point and the leaf will stop in that position. 01 = minimum sensitivity (maximum time before reversal) 10 = maximum sensitivity (minimum time before reversal)	01	06	06	05	06	05
US	**ULTRA-SENSITIVITY:** This function activates an obstacle detection system, based on the control of the variation of the current absorbed by the motor, causing immediate leaf reversal. y = active no = excluded	no	no	no	y	no	y

Display	Advanced Function	Default 0	Default 1	Default 2	Default 3	Default 4	Default 5
r8	**MECHANICAL STOP SEARCH ANGLE (NOT displayed if function FC or FA = 01):** You can adjust the contact point search angle within which the board will stop movement without reversing, if it encounters an obstacle or the contact point. Adjustable from 0.3 to 20 degrees. From 0.3 to 9.9 degrees, adjustments are made in 0.1 degree steps. From 10 to 20 degrees, adjustments are made in 1 degree steps.	10	10	10	4.0	10	4.0
SF	**SOFT TOUCH: (visualised only with the function En = no):** After touching the travel stop point, the leaves reverse and then rest gently. y = active no = excluded ***This function can be useful to respect the impact curve specified by current standards.*** ***Other more detailed programming possibilities are feasible by PC programming (see dedicated instructions).***	no	no	no	no	no	no
o1	**OUT 1:** You can set the output OUT1 (open collector N.O.) in one of the following functions: 00 = always active 01 = FAIL-SAFE 02 = INDICATOR LIGHT (**off** = closed; **on** = during opening and open/in pause; **flashing** = during closing) 03 = COURTESY LIGHT (stays on for the duration of the movement (even in SETUP) in addition to the set time of function t1 04 = ACTIVE ERROR 05 = automated system OPEN or in PAUSE 06 = automated system CLOSED 07 = automated system MOVING 08 = automated system in EMERGENCY 09 = automated system in OPENING 10 = automated system in CLOSING 11 = *electric lock control before CLOSING* 12 = safety device ACTIVE 13 = TRAFFIC LIGHT function (active when OPENING and with automated system OPEN) 14 = timed output which can be activated from the second radio channel OMNIDEC (see function t1) 15 = output which can be activated from the second radio channel OMNIDEC (step-by-step function) 16 = active during movement of leaf 1 17 = active during movement of leaf 2 18 = Instrusion detection 19 = System working on battery ***If tr is displayed, it indicates that the output is used as a TIMER set from the PC/MAC software.***	00	00	00	00	00	00

ENGLISH

ENGLISH

Display	Advanced Function	Default 0	Default 1	Default 2	Default 3	Default 4	Default 5
t1	**OUT 1 TIMING (visualised only with the function o1 = 03 or o1 = 14):** You can adjust the timing of OUT 1 output if a timed function has been selected with a time from 1 to 59 minutes in 1-minute steps for functions 03-14	01	01	01	01	01	01
o2	**OUT 2:** You can set the output OUT2 (open collector N.O.). *See the options as o1.*	02	02	02	02	02	02
t2	**OUT 2 TIMING (visualised only with the function o2 = 03 or o2 = 14):** *Adjustable as t1.*	01	01	01	01	01	01
AS	**MAINTENANCE REQUEST - CYCLE COUNTER (linked to the subsequent two functions):** You can enable the signaling of maintenance request, or the cycle counter. y enable the SIGNALING when the programmed number of cycles has been reached (as defined in subsequent two functions nc and nd). Signaling consists of a pre-flashing of 8 sec (in addition to the time may already be set with the function PF) before each movement. no enable the CYCLE COUNTER, that will be displayed in the subsequent two functions nc and nd up to a displayed maximum of 65,530. ☞ ***If the number of cycles performed is greater than 65,530 the subsequent two functions nc and nd will display 65 and 53, respectively.***	no	no	no	no	no	no
nc	**CYCLE PROGRAMMING (THOUSANDS):** If AS = y the display will show the number of thousands of cycles after which the signaling of maintenance request begins (can be set from 0 to 99). If AS = no the display will show the number of thousands of work cycles performed. The value displayed is updated with the succession of the cycles, interacting with the value in nd. ☞ ***When AS = no you can reset the cycle counter: press simultaneously + and − for 5 sec.***	00	00	00	00	00	00
nd	**CYCLE PROGRAMMING (TENS):** If AS = y the display will show the number of tens of cycles after which the signaling of maintenace request begins (can be set from 0 to 99). If AS = no the display will show the number of tens of work cycles performed. The value displayed is updated with the succession of the cycles, interacting with the value in nc. ☞ ***e.g.: if the system has performed 11,218 cycles, nc = 11 and nd = 21 will be displayed***	00	00	00	00	00	00

St	**AUTOMATED SYSTEM STATUS:** You can exit programming, choosing whether or not to save the configuration you just performed. 1. set the choice: y to SAVE and EXIT the programming no to EXIT the programming WITHOUT SAVING 2. press the button **F** to confirm; at the end the display returns to visualize the **automated system status**: 00 = CLOSED 01 = OPEN 02 = Stationary then “OPENS” 03 = Stationary then “CLOSES” 04 = In “PAUSE” 05 = Opening 06 = Closing 07 = FAIL SAFE in progress 08 = checking BUS-2EASY devices in progress 09 = Pre-flash then “OPENS” 10 = Pre-flash then “CLOSES” 11 = Emergency open 12 = Emergency close HP = Hold position	y

ENGLISH

6. BUS 2EASY DEVICE INSTALLATION

You can add BUS-2EASY devices to the system at any time, proceeding as follows:

1. Cut off the electrical power to the board.
2. Install and set the BUS-2EASY accessories according to the instructions of the devices.
3. Connect the BUS-2EASY devices according to the instructions of Chapter ***ELECTRICAL CONNECTIONS***.
4. Power up the board.
5. Complete the procedure for BUS-2EASY device entry.

6.1. BUS-2EASY device entry

1. Access BASIC programming and scroll through the functions up until bu. When F is released, the display will show the BUS-2EASY devices status *(see the figure)*.
2. Perform the entry: simultaneously press and hold + and − for at least 5 sec (during this time, the display will blink).
3. y will appear as a confirmation of entry completion.
4. Release the + and − buttons. The status of the BUS-2EASY devices will be displayed.

If no BUS device has ever been entered in the board, the display will read no.

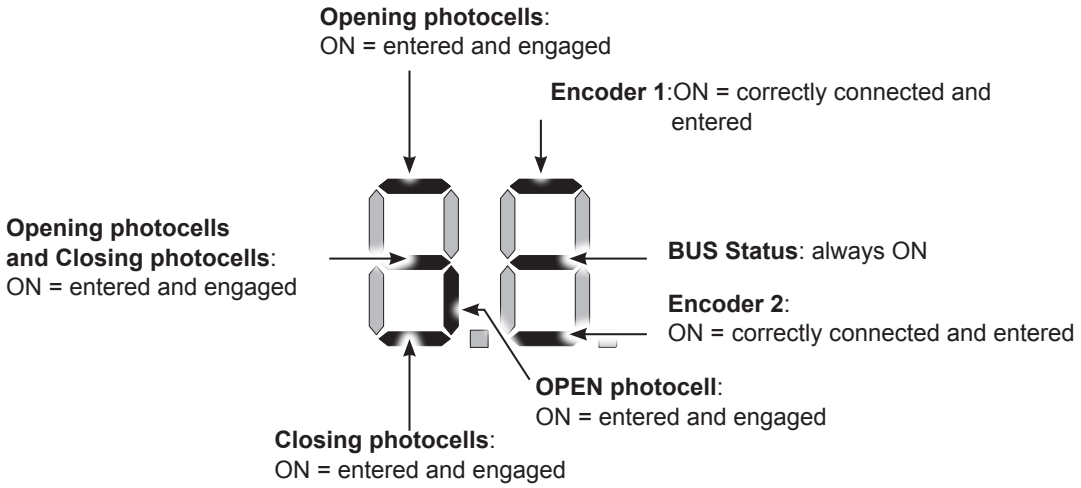

Fig. Visualising the BUS-2EASY status in the function bu: each segment of the display shows one type of device.

Fig. examples of BUS-2EASY status visualization on display.

In STAND BY (gate closed and in stand-by) with BUS-2EASY ***Encoder*** on leaf 1 and leaf 2 and BUS-2EASY ***Photocells*** correctly connected and entered.

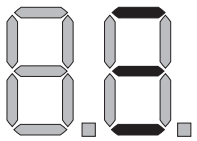

In case of BUS-2EASY ***Encoder*** on leaf1 and leaf 2 and BUS-2EASY ***Photocells*** correctly connected and entered and with closing photocells engaged:

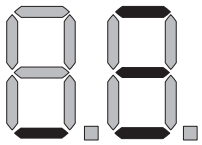

ENGLISH

6.2. Checking the securing devices entered on the board

To verify the types of BUS device recognised through the entry:

1. Press and hold the **+** button during stand-by visualisation; the segments corresponding to at least one entered device will go ON. E.g.:

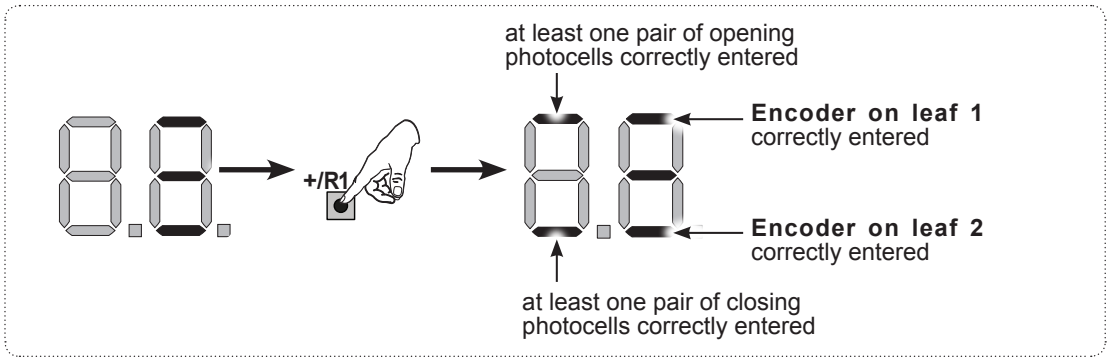

To check the condition of the BUS-2EASY connection, verify the LED on the board:

LED DL15 (Red)

ON	Safety device engaged or pulse generator active
OFF	NO safety device engaged neither pulse generator active

LED DL14 (Green)

ON steady	Normal activity (led ON even if there are no devices).
Slow blinking (blink every 2,5 sec)	BUS-2EASY line short-circuit.
Rapid blinking (blink every 0.5 sec)	Error in the BUS-2EASY connection. Repeat the device entry. If the error occurs again, check: - That there are no more than one device in the system with the same address. - Calling error (number > or < the connected BUS devices). - FAIL SAFE error on the BUS device.
OFF	Board in Sleep mode (if used).

7. TIME LEARNING - SETUP

When the board is powered, if a SETUP has never been performed, or if the board requests it, on the display SO indicates that a SETUP must be performed.

During SETUP, the connected BUS-2EASY accessories are always entered. The BUS-2EASY encoders entered by the SETUP must always be enabled using the parameter En (BASIC Programming).

During SETUP all safety devices are disabled! Therefore, carry out the operation avoiding any transit in the leaf movement area.

If a system without an encoder is installed, mechanical stops will be required for the leaves.

Perform the SET-UP as follows:

1. Enter BASIC programming and go to the parameter tL , when F is released -- will appear.
2. Ensure that the gate leaves are closed. Otherwise, proceed as follows:
   - Press and hold - to close leaf 2
   - Press and hold + to close leaf 1

Should pressing + and/or - command opening of the corresponding leaf, cut off power and, on terminal board J11 or J12, invert the cables of the corresponding motor.

3. With the gate leaves closed, launch SETUP by pressing and holding ✚ and ━ until S1 begins to flash on the display (about 3 sec).
4. Release ✚ e ━. Leaf 1 begins its opening movement.

Operation WITHOUT Safecoder	Operation WITH Safecoder
Leaf 1 automatically acknowledges the mechanical stop.	Leaf 1 automatically acknowledges the mechanical stop. It will in any case be possible to stop leaf movement at any time and in the desired point by sending an OPEN A pulse.

5. On the display S2 will flash (only if 2 motors have been selected): leaf 2 begins opening.

Operation WITHOUT Safecoder	Operation WITH Safecoder
Leaf 2 automatically acknowledges the mechanical stop.	Leaf 2 automatically acknowledges the mechanical stop. It will in any case be possible to stop leaf movement at any time and in the desired point by sending an OPEN A pulse.

Steps 4 and 5 with function FA :

FA = 01 *(the limit switch determines the stopping of motion) with **Safecoder** installed the OPEN A pulse for stopping motion is ignored.*

FA = 02 *(the limit switch determines the start of deceleration) send an OPEN A pulse only after involving the opening limit switch, without **Safecoder**, make sure that the limit switch is engaged before the mechanical stop.*

6. On the display S3 will flash (only if 2 motors have been selected): leaf 2 begins closing.

Operation WITHOUT Safecoder	Operation WITH Safecoder
Leaf 2 automatically acknowledges the mechanical stop.	Leaf 2 automatically acknowledges the mechanical stop. It will in any case be possible to stop leaf movement at any time and in the desired point by sending an OPEN A pulse.

7. On the display S4 flashes: leaf 1 begins closing.

Operation WITHOUT Safecoder	Operation WITH Safecoder
Leaf 1 automatically acknowledges the mechanical stop	Leaf 1 automatically acknowledges the mechanical stop. It will in any case be possible to stop leaf movement at any time and in the desired point by sending an OPEN A pulse.

Steps 6 and 7 with function FC :

FC = 01 *(the limit switch determines the stopping of motion) the OPEN A pulse for stopping motion is ignored.*

FC = 02 *(the limit switch determines the start of deceleration) with **Safecoder** installed send an OPEN A pulse only after involving the closing limit switch, without **Safecoder**, make sure that the limit switch is engaged before the mechanical stop*

8. S5 flashes on the display: both leaves open at full speed.
9. The board will automatically exit the programming menu and will display the automated system status (00) to confirm that the SETUP procedure has been completed correctly. If the procedure is not completed correctly, on the display S0 will start flashing, indicating that a new SETUP procedure must be performed.

The deceleration spaces can be configured and modified from the display using the parameters r1 and r2 (see Advanced Programming) without repeating the SETUP.

ENGLISH

ENGLISH

8. MEMORISING THE RADIO CODE

The control board features an integrated 2-channel decoding system (DS, SLH/SLH LR, RC) called OMNIDEC. This system lets you memorise, using an additional receiver module (on J5 connector) and more radio controls having different technology but the same frequency. You can thus control both total opening (OPEN A) and partial opening (OPEN B).

The different types of radio code (DS, SLH/SLH LR, LC/RC) can coexist simultaneously on the two channels. You can enter up to 250 radio codes divided between OPEN A and OPEN B/CLOSE.

To use different encoding systems on the same channel, you must complete the learning of each encoding system and then repeat the procedure for the other one.

Other, more detailed, programming options are available using a PC/MAC (see dedicated PC/MAC instructions). For example, you can set an automatic OPEN command on the radio channel to command an automatic cycle (open-pause-close) regardless of the selected logic.

8.1. Memorising the SLH/SLH LR radio controls

1. Press and hold + (OPEN A programming) or - (OPEN B/CLOSE programming).
2. After keeping the button pressed for about 5 sec, the corresponding radio LED (DL11 or DL12) will begin to flash slowly for about 20 sec.
3. Release the button.
4. Simultaneously press and hold P1 and P2 on the SLH/SLH LR radio control (only MASTER radio control).
5. The radio control LED will begin to flash.
6. Release both buttons.
7. Ensure that LED DL11 or DL12 on the board is still flashing (see point 2) and, while the radio control LED is still flashing, press and hold the desired button on the radio control (the radio control LED will go on steady).
8. The corresponding LED on the board (DL11 or DL12) will go on steady for 1 sec and then go off, indicating that memorisation has been completed.
9. Release the radio control button.
10. To complete memorisation, press the button of the memorised radio control twice in succession. The automated system will perform an opening cycle.

Ensure that there are no obstacles (by people or things) during the automated system movement.

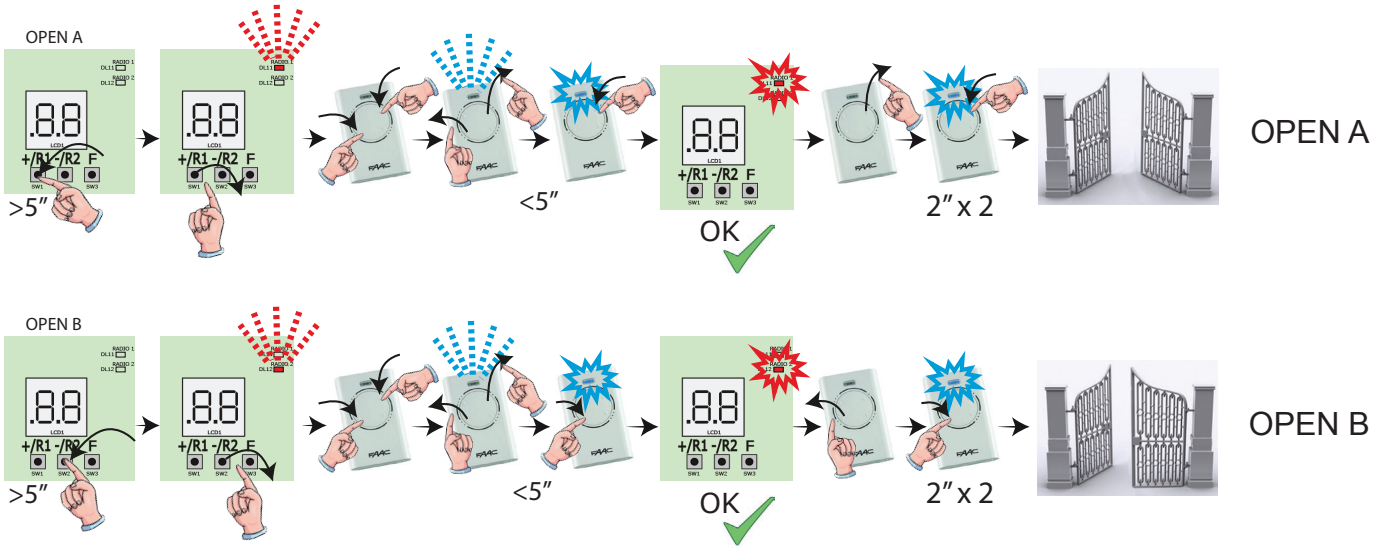

To enable other radio controls with the same system code, you must transfer the system code of the memorised radio control button to the button corresponding to the radio control you wish to add:

1. Simultaneously press and hold P1 and P2 on the memorised radio control.
2. The radio control LED will begin to flash.
3. Release both buttons.
4. Press and hold, while the radio control LED is still flashing, the memorised button (the radio control LED will go on steady).
5. Bring the radio controls close together, press and hold the corresponding button of the radio control you wish to add, and release only after the radio control LED flashes twice, indicating that memorisation has been completed.
6. Press the button of the memorised radio control twice in succession. The automated system will perform an opening cycle.

⚠ ***Ensure that there are no obstacles (by people or things) during the automated system movement.***

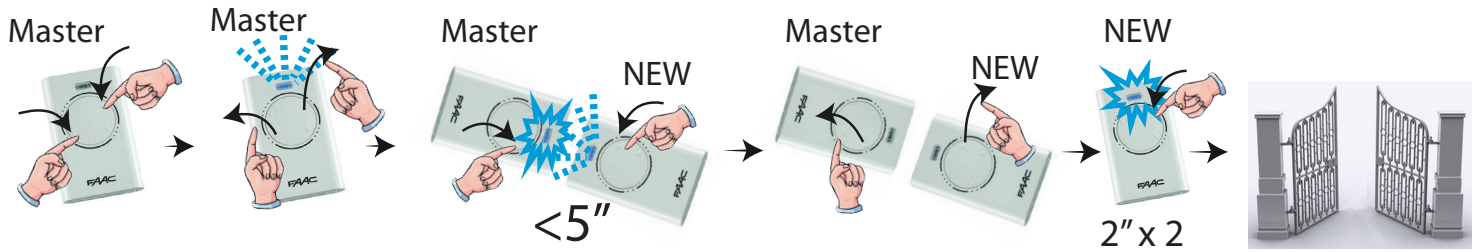

ENGLISH

8.2. Memorising LC/RC radio controls (433MHz ONLY)

1. Press and hold + (OPEN A programming) or - (OPEN B/CLOSE programming).
2. After keeping the button pressed for about 5 sec, the corresponding radio LED (DL11 or DL12) will begin to flash slowly for about 20 sec.
3. Release the button.
4. During radio LED flashing, press the desired button of the LC/RC radio control.
5. The corresponding LED on the board (DL11 or DL12) will go on steady for 1 second, indicating that memorisation has been completed, and will begin flashing again for another 20 sec during which you can memorise another radio control.
6. When the 20 sec have elapsed, the LED will turn off, indicating that the procedure has been completed.
7. To add other radio controls, repeat the procedure from point

8.3. Remote memorisation of LC/RC radio controls

With LC/RC radio controls you can remotely memorise other radio controls, i.e. without working directly on the board, using a previously memorised radio control.

1. Take a radio control that has already been memorised on one of the 2 channels (OPEN A or OPEN B/CLOSE) and move to the vicinity of the board.
2. Simultaneously press and hold P1 and P2 until both LEDs flash slowly for 5 sec.
3. Within 5 seconds, press the previously memorised radio control button to activate the learning phase for the selected channel.
4. The LED on the board corresponding to the channel in learning mode will flash for 20 sec within which another radio control code is transmitted by pressing the button.
5. The corresponding LED on the board will go on steady for 2 sec (indicating that memorisation has been completed) and will begin flashing again for another 20 sec, during which you can memorise other radio controls, and will finally go off.

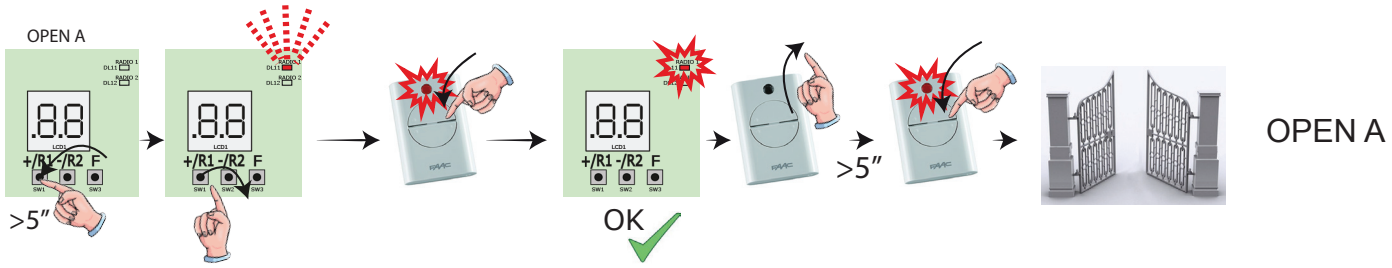

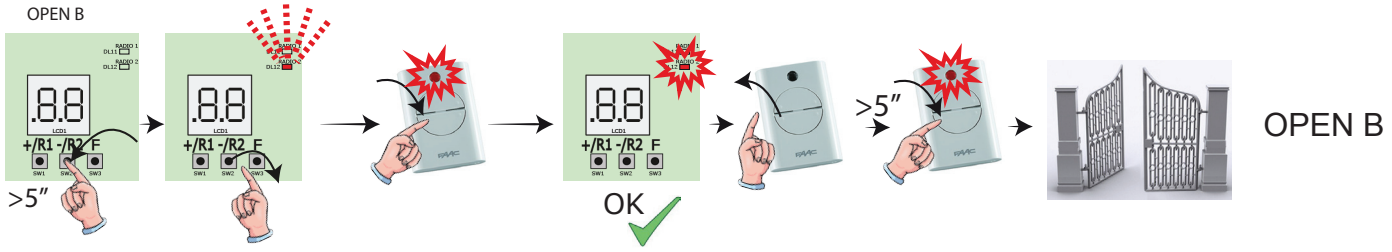

ENGLISH

8.4. Memorising DS radio controls

1. On the DS radio control, choose the desired ON - OFF combination of the 12 dip-switches.
2. Press and hold + (OPEN A programming) or - (OPEN B/CLOSE programming).
3. After keeping the button pressed for about 5 sec, the corresponding radio LED (DL11 or DL12) will begin to flash slowly for about 20 sec.
4. Release the button.
5. During radio LED flashing, press the button of the radio control you wish to program.
6. The corresponding LED on the board (DL11 or DL12) will go on steady for 1 second and then go off, indicating that memorisation has been completed.
7. To add other different codes, repeat the procedure starting from point 1.
8. To add other radio controls with the same code, set the 12 dip-switches according to the same combination as the already memorised radio control.

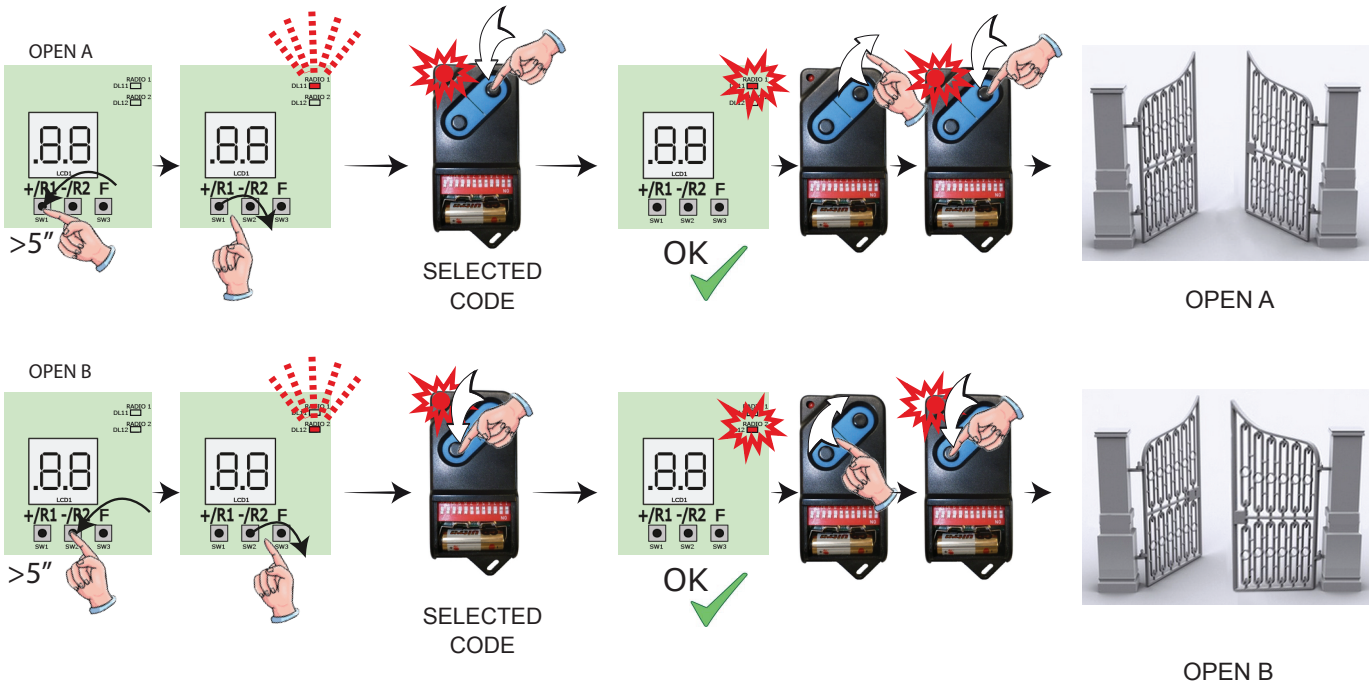

8.5. DELETING the radio controls

⚠ ***This operation CANNOT be reversed. This will delete ALL the radio control codes memorised as both OPEN A and OPEN B/CLOSE. The cancellation procedure is active only in gate status visualisation mode.***

1. Press and hold - 

.
2. After pressing for about 5 sec, the DL16 LED begins to flash slowly; after another 5 sec of slow flashing and holding, the LEDs DL16 and DL17 begin flashing more rapidly (cancellation has started).
3. Once rapid flashing has stopped, LEDs DL16 and DL17 will go on steady, confirming the cancellation of all the radio codes (OPEN A and OPEN B/CLOSE) from the board memory.
4. Release - 

. The LEDs will go off, indicating correct cancellation.

9. CONNECTION TO EMERGENCY BATTERIES (OPTIONAL)

The emergency batteries will activate the automated system also in the event of a power cut.

The batteries (Lead 12V- 4 Ah/90 x70 x 108 mm) are normally charged by a battery charger built into the board and start operating when a mains power cut occurs.

The emergency batteries can be inserted inside the container of the control board, laying them against a specific support.

1. Remove the container cover with a screwdriver.

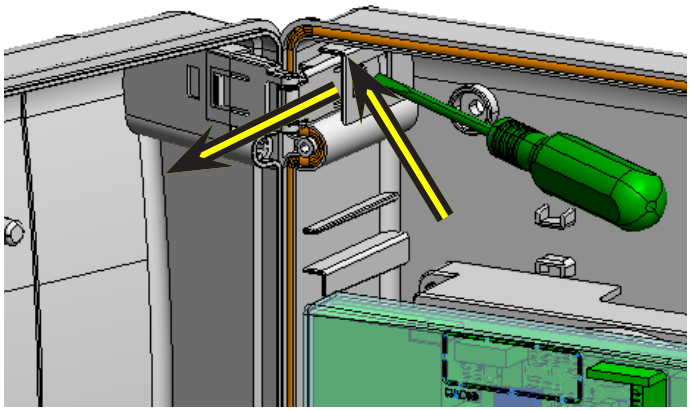

Fig. 27

2. Insert the support as shown in the figure below.

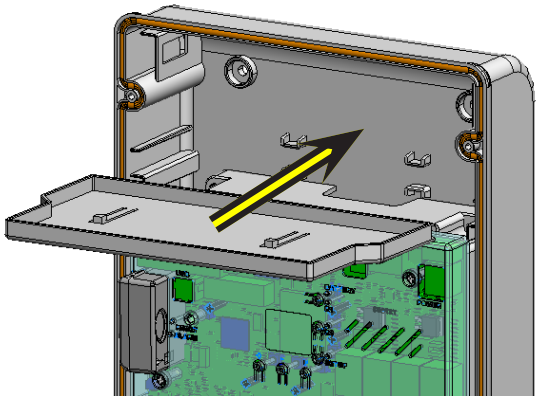

Fig. 28

3. Insert the batteries as shown in the figure below.

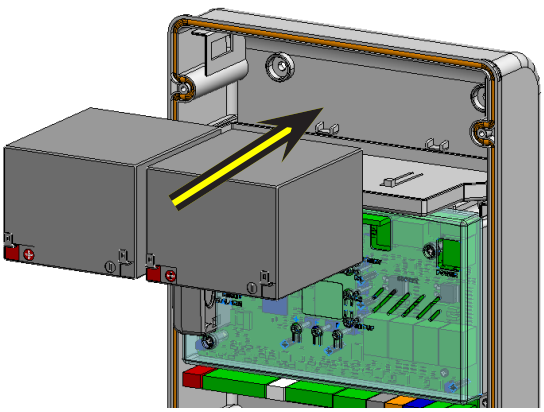

Fig. 29

4. Connect the cables to the batteries, respecting polarity, and the connector to terminal J2 of the board, as shown in the figure below.

Connect the connector to the batteries, only after you have connected the primary power supply connector to J1.

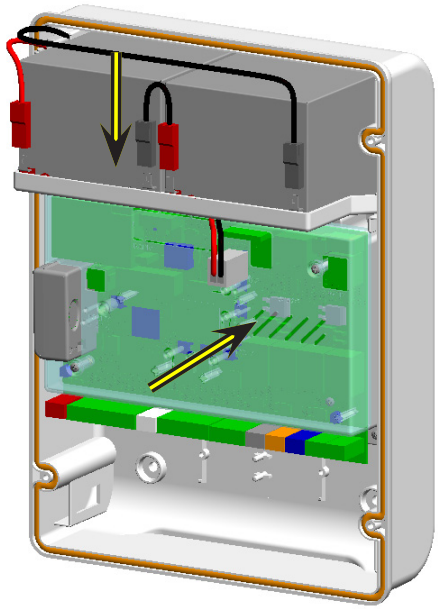

Fig. 30

5. Re-fit the cover on the container.

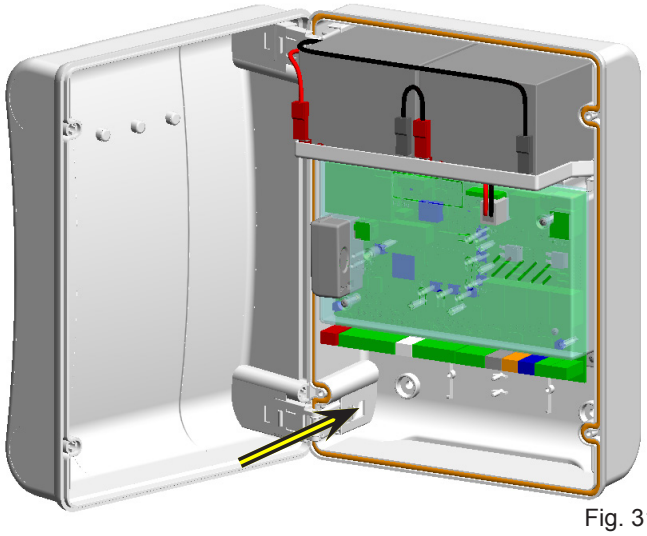

Fig. 31

When changing to battery operation, the automated system operates in normal mode up to the minimum reserve charge (16V dc- below this threshold the board goes into "SLEEP" function until mains voltage is restored). In this condition the board operation is inhibited. The "SLEEP" function is shown by the board with a flashing every 4 seconds of the input LEDs and with the display switching OFF.

At changeover to battery operation, the flashing light flashes faster with respect to operation on power from the mains.

Other battery management programming possibilities are feasible by programming with a PC (see dedicated instructions).

ENGLISH

To check correct battery charge, control the LED referring to the secondary power supply DL15:

LED DL15 during operation on the mains supply:

LED on	Battery charged
LED flashing	Battery being recharged. The LED continues to flash until the battery has recharged sufficiently.
LED off	Battery discharged

LED DL15 during operation on the battery:

LED on	Battery charged
LED flashing	Battery almost flat
LED off	Battery discharged

ENGLISH

10. START-UP

10.1. Leds check

After you have made all the connections and powered up the board, check with the table below the status of the LEDs in relation to the status of the inputs (condition of automated system closed and at rest in **bold**).

Check the status of the signalling LEDs as per table below. Note that:

Led ON = contact closed
Led OFF = contact open

Operation of status signalling LEDs

LED	Description	ON (contact closed)	OFF (contact open)
DL1	IN1 -OPEN A	Command enabled	**Command disabled**
DL2	IN2 - OPEN B	Command enabled	**Command disabled**
DL3	IN3- STOP	**Command disabled**	Command enabled
DL4	IN4 - FSW OP	**Safety devices disabled**	Safety devices tripped
DL5	IN5 - FSW CL	**Safety devices disabled**	Safety devices tripped
DL6	FCA1	**Opening travel-limit devices free**	Opening travel-limit devices engaged
DL7	FCC1	Closing travel-limit devices free	**Closing travel-limit devices engaged**
DL8	FCA2	**Opening travel-limit devices free**	Opening travel-limit devices engaged
DL9	FCC2	Closing travel-limit devices free	**Closing travel-limit devices engaged**
DL10	ENC1	Flashing during operation	
DL11	ENC2	Flashing during operation	

10.2. Testing the automated system

Once installation and programming is completed, ensure that the system is operating correctly.
Be especially careful that the safety devices operate correctly and ensure that the system complies with all current safety regulations.
Close the cover in the provided seat with gasket.

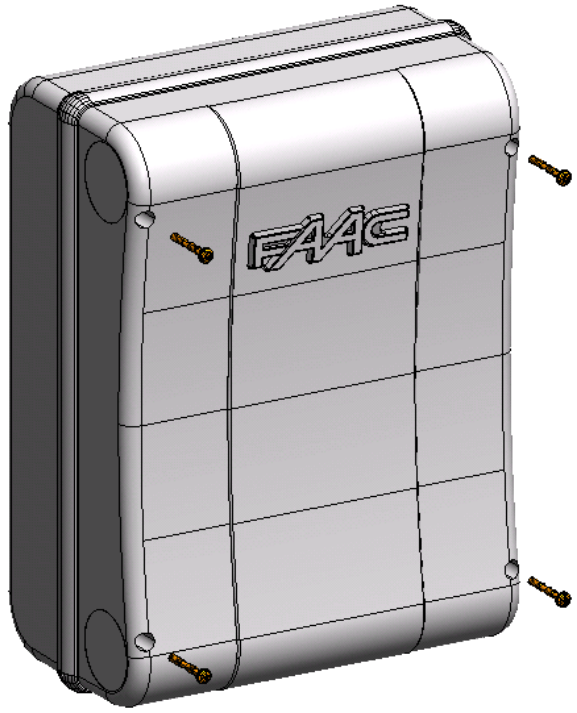

Fig. 31

11. SIGNALLING ERRORS AND ALARMS

In case of **ERRORS** (conditions that stop gate operation) or **ALARMS** (conditions that do not compromise gate operation) the display will show the number corresponding to the warning in progress by simultaneously pressing **+** and **−**.

These warnings will disappear in the following cycle only if the situation causing them is removed.

11.1. Errors

*When there is an ERROR the ERROR LED will go on steady. By simultaneously pressing **+** and **−** the display will show the corresponding error number.*

The following table contains all the errors that can be viewed on the display.

N°	ERROR	SOLUTION
01	Board broken	Replace the board
05	Invalid SETUP	Repeat board SETUP
08	BUS-2EASY device error	Ensure that no two pairs of devices have the same address.
09	BUS-2EASY output short-circuit	Check the connections of the connected and entered BUS-2EASY devices
10	Motor 1 limit switch error	Check the limit switch connections for motor 1
11	Motor 2 limit switch error	Check the limit switch connections for motor 2
12	BUS-2EASY call	Ensure that the BUS devices are operating correctly and, if necessary, repeat BUS device acquisition
13	FAIL SAFE	Check that the safety devices (photocells) are operating correctly
14	Configuration error	Check that the board is configured correctly (basic and advanced programming) and, if necessary, repeat SETUP
17	Motor 1 encoder fault	Check the connections or replace motor 1 encoder
18	Motor 2 encoder fault	Check the connections or replace motor 2 encoder
19	Incorrect memory data	Repeat BUS-2EASY device entry and/or re-program the board
93	High absorption at +24V	Check that absorption by the accessories connected is within permitted limits

11.2. Alarms

*When there is an ALARM the **ERROR** LED will begin to flash. By simultaneously pressing **+** and **−** the display will show the corresponding alarm number.*

The following table contains all the alarms that can be viewed on the display.

N°	ALARM	Solution/Description
20	Obstacle on MOTOR 1 (only with encoder)	Remove any possible obstacle on leaf 1
21	Obstacle on MOTOR 2 (only with encoder)	Remove any possible obstacle on leaf 2
25	LOCK 1 output short-circuit	Remove the cause of the short-circuit
26	LOCK 2 output short-circuit	Remove the cause of the short-circuit
27	Nr. of consecutive obstacles exceeded during opening	Remove any possible obstacle. Should the problem persist, repeat SETUP
28	Nr. of consecutive obstacles exceeded during closing	Remove any possible obstacle. Should the problem persist, repeat SETUP
30	XF radio code memory full	Cancel the radio codes that are not being used using the PC program or use an additional DEC/MINIDEC/RP module
31	Tampering alarm	Movement was performed with automation in status St= 00 or 01. Perform a manoeuvre cycle.
35	TIMER active and TIMER function operating:	TIMER function is operating
40	Service request	Contact the installer for maintenance
50	The HOLD POSITION is operating (active on PC/MAC)	HOLD POSITION function is operating
60	TIMER active and error in TIMER data	Reload a correct TIMER configuration with the PC/MAC programme
62	Loss of time and date on the board (only if the TIMER is operating)	Reload the time and date with the PC/MAC programme and replace the BAT1 - CR2032 buffer battery
63	JOLLY TIMER is activated	JOLLY TIMER is enabled by terminal board J3
64	TIMER DISABLED is operating	TIMER is disabled by terminal board J3

12. FUNCTION LOGICS

This table summarizes the function logics.

For a detailed description of each one, see the queued Tables.

LOGIC		Automated system status: stopped	Automated system status: in motion	Status: photocell involvement
E	Semiautomatic	An OPEN pulse opens the gate and the following one will close it	An OPEN pulse while opening stops and reopens during closing	During motion, the photocells reverse
EP	Semiautomatic, Step-by-Step	An OPEN pulse opens the gate and the following one will close it	An OPEN pulse during motion blocks	During motion, the photocells reverse
S	Automatic Safety	An OPEN pulse opens the gate and closes automatically after the pause time	An OPEN pulse during pause closes and reverses during motion	The closing photocells reclose the gate during pause; they memorise closing during opening and immediately reverse during closing
SA	Automatic Safety reversing during pause	An OPEN pulse opens the gate and closes automatically after the pause time	An OPEN pulse during pause closes; during opening it has no effect; it reverses during closing	The closing photocells reset the pause time
SP	Automatic Safety Step-by-Step	An OPEN pulse opens the gate and closes automatically after the pause time	An OPEN pulse during pause closes and during motion blocks the operation	The closing photocells reclose the gate during pause; they memorise closing during opening and immediately reverse during closing
A1	Automatic 1	An OPEN pulse opens the gate and closes automatically after the pause time	An OPEN pulse during opening is ignored, during pause it recharges the pause time and during closing it reopens the leaves	The closing photocells reclose the gate during pause; they memorise closing during opening and immediately reverse during closing
A	Automatic	An OPEN pulse opens the gate and closes automatically after the pause time	An OPEN pulse during opening is ignored, during pause it recharges the pause time and during closing it reopens the leaves	The closing photocells recharge the pause time
AP	Automatic Step-by-Step	An OPEN pulse opens the gate and closes automatically after the pause time	An OPEN pulse during opening and during pause blocks the operation; it reverses during closing	The closing photocells recharge the pause time
At	Automatic Timer	An OPEN pulse opens the gate and closes automatically after the pause time. If the cycle started with an OPEN input, it opens, otherwise it closes	An OPEN pulse during opening is ignored, during pause it resets the pause time and during closing it reopens the leaves	The closing photocells recharge the pause time
b	Semiautomatic “b” (OPEN-B inputs become CLOSE)	Logic with two separate commands: OPEN-A pulse opens; CLOSE pulse closes	An OPEN-A pulse during closing opens, a CLOSE pulse during opening closes	During motion, the photocells reverse
bC	Mixed Logic (during opening “b”, during closing “C”), (OPEN-B inputs become CLOSE)	Logic with two separate commands: OPEN-A pulse opens; a held CLOSE pulse closes	An OPEN-A pulse during closing opens, a CLOSE pulse during opening closes	During motion, the photocells reverse
C	Dead-man (OPEN-B inputs become CLOSE)	Logic with two separate commands: a held OPEN-A pulse opens; a held CLOSE pulse closes	An OPEN-A pulse during closing opens, a CLOSE pulse during opening closes	During motion, the photocells reverse

E SEMI-AUTOMATIC LOGIC

AUTOMATED SYSTEM STATUS	PULSES						
	OPEN A	OPEN B	CLOSE	STOP	FSW OP	FSW CL	FSW CL/OP
CLOSED	OPENS	OPENS PARTIALLY	NO EFFECT	NO EFFECT (OPEN DISABLED)		NO EFFECT	NO EFFECT (OPEN DISABLED)
OPENING	STOPS* [1]	STOPS*	CLOSES	STOPS*	REVERSES	NO EFFECT	STOPS; OPENS AT RELEASE (OPEN STOPS* - SAVES CLOSE)
OPEN	CLOSES [1]	CLOSES		NO EFFECT (OPEN/ CLOSE DISABLED)	NO EFFECT	NO EFFECT (CLOSE DISABLED)	NO EFFECT (OPEN/ CLOSE DISABLED)
CLOSING	OPENS		NO EFFECT	STOPS*	NO EFFECT	REVERSES [2]	STOPS; OPENS AT RELEASE (OPEN STOPS* - SAVES CLOSE)
*STOPPED	CLOSES			NO EFFECT (OPEN/ CLOSE DISABLED)	NO EFFECT (OPEN DISABLED)	NO EFFECT (CLOSE DISABLED)	NO EFFECT (OPEN STOPS* - SAVES CLOSE)

EP SEMI-AUTOMATIC "STEP-BY-STEP" LOGIC

AUTOMATED SYSTEM STATUS	PULSES						
	OPEN A	OPEN B	CLOSE	STOP	FSW OP	FSW CL	FSW CL/OP
CLOSED	OPENS	OPENS PARTIALLY	NO EFFECT	NO EFFECT (OPEN DISABLED)		NO EFFECT	NO EFFECT (OPEN DISABLED)
OPENING	STOPS* [1]	STOPS*	CLOSES	STOPS*	REVERSES	NO EFFECT	STOPS; OPENS AT RELEASE (OPEN STOPS* - SAVES CLOSE)
OPEN	CLOSES [1]	CLOSES		NO EFFECT (OPEN/ CLOSE DISABLED)	NO EFFECT	NO EFFECT (CLOSE DISABLED)	NO EFFECT (OPEN/ CLOSE DISABLED)
CLOSING	STOPS*		NO EFFECT	STOPS*	NO EFFECT	REVERSES [2]	STOPS; OPENS AT RELEASE (OPEN STOPS* - SAVES CLOSE)
*STOPPED	RESTARTS MOVING IN THE OPPOSITE DIRECTION. ALWAYS CLOSES AFTER STOP		CLOSES	NO EFFECT (OPEN/ CLOSE DISABLED)	NO EFFECT (OPEN DISABLED)	NO EFFECT (CLOSE DISABLED)	NO EFFECT (OPEN STOPS* - SAVES CLOSE)

S AUTOMATIC "SAFETY" LOGIC

AUTOMATED SYSTEM STATUS	PULSES						
	OPEN A	OPEN B	CLOSE	STOP	FSW OP	FSW CL	FSW CL/OP
CLOSED	OPENS; CLOSES AFTER PAUSE TIME	OPENS PARTIALLY; CLOSES AFTER PAUSE TIME	NO EFFECT	NO EFFECT (OPEN DISABLED)		NO EFFECT	NO EFFECT (OPEN DISABLED)
OPENING	REVERSES		CLOSES	STOPS*	REVERSES	COMPLETES THE OPENING, THEN CLOSES WITHOUT PAUSE TIME	STOPS; OPENS AT RELEASE (SAVES CLOSE)
OPEN IN PAUSE	CLOSES [1]	CLOSES		STOPS*	NO EFFECT	STOPS; CLOSES AT RELEASE	
CLOSING	OPENS		NO EFFECT	STOPS*	NO EFFECT	REVERSES [2]; THEN CLOSES WITHOUT PAUSE TIME	STOPS; OPENS AT RELEASE, THEN CLOSES WITHOUT PAUSE TIME
*STOPPED	CLOSES			NO EFFECT (OPEN/ CLOSE DISABLED)	NO EFFECT (OPEN DISABLED)	NO EFFECT (CLOSE DISABLED)	NO EFFECT (OPEN/CLOSE DISABLED)

[1] *if the cycle began with OPEN-B, opens totally*
[2] *operation can be modified by programming*
[3] *it opens if, at power up, an OPEN (A or B) command is active. Otherwise it closes.*

ENGLISH

ENGLISH

SA AUTOMATIC "SAFETY" WITH IN-PAUSE REVERSING LOGIC

AUTOMATED SYSTEM STATUS	PULSES						
	OPEN A	OPEN B	CLOSE	STOP	FSW OP	FSW CL	FSW CL/OP
CLOSED	OPENS; CLOSES AFTER PAUSE TIME	OPENS PARTIALLY; CLOSES AFTER PAUSE TIME	NO EFFECT	NO EFFECT (OPEN DISABLED)		NO EFFECT	NO EFFECT (OPEN DISABLED)
OPENING	NO EFFECT [1]	NO EFFECT	CLOSES	STOPS*	REVERSES	NO EFFECT	STOPS; OPENS AT RELEASE (SAVES CLOSE)
OPEN IN PAUSE	CLOSES [1]	CLOSES		STOPS*	NO EFFECT	RECHARGES PAUSE TIME (CLOSE DISABLED)	
CLOSING	OPENS		NO EFFECT	STOPS*	NO EFFECT	REVERSES [2]	STOPS; OPENS AT RELEASE (SAVES CLOSE)
*STOPPED	CLOSES			NO EFFECT (OPEN/ CLOSE DISABLED)	NO EFFECT (OPEN DISABLED)	NO EFFECT (CLOSE DISABLED)	NO EFFECT (OPEN/CLOSE DISABLED)

SP AUTOMATIC "SAFETY" "STEP-BY-STEP" LOGIC

AUTOMATED SYSTEM STATUS	PULSES						
	OPEN A	OPEN B	CLOSE	STOP	FSW OP	FSW CL	FSW CL/OP
CLOSED	OPENS; CLOSES AFTER PAUSE TIME	OPENS PARTIALLY; CLOSES AFTER PAUSE TIME	NO EFFECT	NO EFFECT (OPEN DISABLED)		NO EFFECT	NO EFFECT (OPEN DISABLED)
OPENING	STOPS* [1]	STOPS*	CLOSES	STOPS*	REVERSES	COMPLETES THE OPENING, THEN CLOSES WITHOUT PAUSE TIME	STOPS; OPENS AT RELEASE, THEN CLOSES WITHOUT PAUSE TIME (OPEN STOPS* - SAVES CLOSE)
OPEN IN PAUSE	CLOSES [1]	CLOSES		STOPS*	NO EFFECT	STOPS; CLOSES AT RELEASE	
CLOSING	STOPS*		NO EFFECT	STOPS*	NO EFFECT	REVERSES [2]	STOPS; OPENS AT RELEASE (SAVES CLOSE)
*STOPPED	RESTARTS MOVING IN THE OPPOSITE DIRECTION. ALWAYS CLOSES AFTER STOP		CLOSES	NO EFFECT (OPEN/ CLOSE DISABLED)	NO EFFECT (OPEN DISABLED)	NO EFFECT (CLOSE DISABLED)	NO EFFECT (OPEN/ CLOSE DISABLED)

A1 AUTOMATIC1 LOGIC

AUTOMATED SYSTEM STATUS	PULSES						
	OPEN A	OPEN B	CLOSE	STOP	FSW OP	FSW CL	FSW CL/OP
CLOSED	OPENS; CLOSES AFTER PAUSE TIME	OPENS PARTIALLY; CLOSES AFTER PAUSE TIME	NO EFFECT	NO EFFECT (OPEN DISABLED)		NO EFFECT	NO EFFECT (OPEN DISABLED)
OPENING	NO EFFECT [1]	NO EFFECT	CLOSES	STOPS*	[2]	COMPLETES THE OPENING, THEN CLOSES WITHOUT PAUSE TIME	STOPS; OPENS AT RELEASE, THEN CLOSES WITHOUT PAUSE TIME
OPEN IN PAUSE	RECHARGES PAUSE TIME [1]	RECHARGES PAUSE TIME	CLOSES	STOPS*	NO EFFECT	DISABLES CLOSE; AT RELEASE CLOSES	AT THE END OF THE PAUSE TIME, CLOSES AT RELEASE
CLOSING	OPENS		NO EFFECT	STOPS*	NO EFFECT	REVERSES [2]	STOPS; OPENS AT RELEASE, THEN CLOSES AFTER PAUSE TIME
*STOPPED	CLOSES			NO EFFECT (OPEN/ CLOSE DISABLED)	NO EFFECT (OPEN DISABLED)	NO EFFECT (CLOSE DISABLED)	NO EFFECT (OPEN/CLOSE DISABLED)

[1] *if the cycle began with OPEN-B, opens totally*
[2] *operation can be modified by programming*
[3] *it opens if, at power up, an OPEN (A or B) command is active. Otherwise it closes.*

A AUTOMATIC LOGIC

AUTOMATED SYSTEM STATUS	PULSES						
	OPEN A	OPEN B	CLOSE	STOP	FSW OP	FSW CL	FSW CL/OP
CLOSED	OPENS; CLOSES AFTER PAUSE TIME	OPENS PARTIALLY; CLOSES AFTER PAUSE TIME	NO EFFECT	NO EFFECT (OPEN DISABLED)		NO EFFECT	NO EFFECT (OPEN DISABLED)
OPENING	NO EFFECT [1]	NO EFFECT	CLOSES	STOPS*	REVERSES	NO EFFECT	STOPS; OPENS AT RELEASE (SAVES CLOSE)
OPEN IN PAUSE	RECHARGES PAUSE TIME [1]	RECHARGES PAUSE TIME	CLOSES	STOPS*	NO EFFECT	RECHARGES PAUSE TIME (CLOSE DISABLED)	
CLOSING	OPENS		NO EFFECT	STOPS*	NO EFFECT	REVERSES [2]	STOPS; OPENS AT RELEASE (SAVES CLOSE)
*STOPPED	CLOSES			NO EFFECT (OPEN/ CLOSE DISABLED)	NO EFFECT (OPEN DISABLED)	NO EFFECT (CLOSE DISABLED)	NO EFFECT (OPEN/ CLOSE DISABLED)

AP AUTOMATIC "STEP-BY-STEP" LOGIC

AUTOMATED SYSTEM STATUS	PULSES						
	OPEN A	OPEN B	CLOSE	STOP	FSW OP	FSW CL	FSW CL/OP
CLOSED	OPENS; CLOSES AFTER PAUSE TIME	OPENS PARTIALLY; CLOSES AFTER PAUSE TIME	NO EFFECT	NO EFFECT (OPEN DISABLED)		NO EFFECT	NO EFFECT (OPEN DISABLED)
OPENING	STOPS* [1]	STOPS*	CLOSES	STOPS*	REVERSES (SAVES OPEN)	NO EFFECT	STOPS; OPENS AT RELEASE (OPEN STOPS* - SAVES CLOSE)
OPEN IN PAUSE	STOPS* [1]	STOPS*	CLOSES	STOPS*	NO EFFECT	RECHARGES PAUSE TIME (CLOSE DISABLED)	
CLOSING	OPENS		NO EFFECT	STOPS*	NO EFFECT	REVERSES [2]	STOPS; OPENS AT RELEASE (OPEN STOPS* - SAVES CLOSE)
*STOPPED	CLOSES			NO EFFECT (OPEN/ CLOSE DISABLED)	NO EFFECT (OPEN DISABLED)	NO EFFECT (CLOSE DISABLED)	NO EFFECT (OPEN/ CLOSE DISABLED)

At AUTOMATIC WITH TIMER FUNCTION LOGIC [3]

AUTOMATED SYSTEM STATUS	PULSES						
	OPEN A	OPEN B	CLOSE	STOP	FSW OP	FSW CL	FSW CL/OP
CLOSED	OPENS; CLOSES AFTER PAUSE TIME	OPENS PARTIALLY; CLOSES AFTER PAUSE TIME	NO EFFECT	NO EFFECT (OPEN DISABLED)		NO EFFECT	NO EFFECT (OPEN DISABLED)
OPENING	NO EFFECT [1]	NO EFFECT	CLOSES	STOPS*	REVERSES	NO EFFECT	STOPS; OPENS AT RELEASE (SAVES CLOSE)
OPEN IN PAUSE	RECHARGES PAUSE TIME [1]	RECHARGES PAUSE TIME	CLOSES	STOPS*	NO EFFECT	RECHARGES PAUSE TIME (CLOSE DISABLED)	
CLOSING	OPENS		NO EFFECT	STOPS*	NO EFFECT	REVERSES [2]	STOPS; OPENS AT RELEASE (SAVES CLOSE)
*STOPPED	CLOSES			NO EFFECT (OPEN/ CLOSE DISABLED)	NO EFFECT (OPEN DISABLED)	NO EFFECT (CLOSE DISABLED)	NO EFFECT (OPEN/ CLOSE DISABLED)

[1] *if the cycle began with OPEN-B, opens totally*
[2] *operation can be modified by programming*
[3] *it opens if, at power up, an OPEN (A or B) command is active. Otherwise it closes.*

ENGLISH

ENGLISH

b SEMI-AUTOMATIC "B" LOGIC (OPEN-B INPUTS BECOME CLOSE)

AUTOMATED SYSTEM STATUS	OPEN A	OPEN B	CLOSE	STOP	FSW OP	FSW CL	FSW CL/OP
				PULSES			
CLOSED	OPENS	NO EFFECT		NO EFFECT (OPEN DISABLED)		NO EFFECT	NO EFFECT (OPEN DISABLED)
OPENING	NO EFFECT	CLOSES		STOPS*	REVERSES	NO EFFECT	STOPS; CLOSES AT RELEASE (SAVES OPEN/CLOSE)
OPEN	NO EFFECT	CLOSES		NO EFFECT (OPEN/ CLOSE DISABLED)	NO EFFECT	NO EFFECT (CLOSE DISABLED)	NO EFFECT (OPEN/ CLOSE DISABLED)
CLOSING	OPENS	NO EFFECT		STOPS*	NO EFFECT	REVERSES [2]	STOPS; OPENS AT RELEASE (SAVES OPEN/CLOSE)
*STOPPED	OPENS	CLOSES		NO EFFECT (OPEN/ CLOSE DISABLED)	NO EFFECT (OPEN DISABLED)	NO EFFECT (CLOSE DISABLED)	NO EFFECT (OPEN/ CLOSE DISABLED)

bC MIXED LOGIC: B IN OPENING - C IN CLOSING (OPEN-B INPUTS BECOME CLOSE)

AUTOMATED SYSTEM STATUS	OPEN A	OPEN B	CLOSE	STOP	FSW OP	FSW CL	FSW CL/OP
	PULSES FOR OPENING / DEAD-MAN COMMANDS FOR CLOSING			PULSES			
CLOSED	OPENS	NO EFFECT		NO EFFECT (OPEN DISABLED)		NO EFFECT	NO EFFECT (OPEN DISABLED)
OPENING	NO EFFECT	CLOSES		STOPS*	REVERSES	NO EFFECT	STOPS; CLOSES AT RELEASE (SAVES OPEN/CLOSE)
OPEN	NO EFFECT	CLOSES		NO EFFECT (OPEN/ CLOSE DISABLED)	NO EFFECT	NO EFFECT (CLOSE DISABLED)	NO EFFECT (OPEN/ CLOSE DISABLED)
CLOSING	OPENS	NO EFFECT		STOPS*	NO EFFECT	REVERSES [2]	STOPS; OPENS AT RELEASE (SAVES OPEN/CLOSE)
*STOPPED	OPENS	CLOSES		NO EFFECT (OPEN/ CLOSE DISABLED)	NO EFFECT (OPEN DISABLED)	NO EFFECT (CLOSE DISABLED)	NO EFFECT (OPEN/ CLOSE DISABLED)

C DEAD-MAN LOGIC (OPEN-B INPUTS BECOME CLOSE)

AUTOMATED SYSTEM STATUS	OPEN A	OPEN B	CLOSE	STOP	FSW OP	FSW CL	FSW CL/OP
	DEAD-MAN COMMANDS			PULSES			
CLOSED	OPENS	NO EFFECT		NO EFFECT (OPEN DISABLED)		NO EFFECT	NO EFFECT (OPEN DISABLED)
OPENING	NO EFFECT	CLOSES		STOPS*	REVERSES	NO EFFECT	STOPS; CLOSES AT RELEASE (SAVES OPEN/CLOSE)
OPEN	NO EFFECT	CLOSES		NO EFFECT (OPEN/ CLOSE DISABLED)	NO EFFECT	NO EFFECT (CLOSE DISABLED)	NO EFFECT (OPEN/ CLOSE DISABLED)
CLOSING	OPENS	NO EFFECT		STOPS*	NO EFFECT	REVERSES [2]	STOPS; OPENS AT RELEASE (SAVES OPEN/CLOSE)
*STOPPED	OPENS	CLOSES		NO EFFECT (OPEN/ CLOSE DISABLED)	NO EFFECT (OPEN DISABLED)	NO EFFECT (CLOSE DISABLED)	NO EFFECT (OPEN/ CLOSE DISABLED)

[1] *if the cycle began with OPEN-B, opens totally*
[2] *operation can be modified by programming*
[3] *it opens if, at power up, an OPEN (A or B) command is active. Otherwise it closes.*

SEDE - HEADQUARTERS

FAAC S.p.A.
Via Calari, 10
40069 Zola Predosa (BO) - ITALY
Tel. +39 051 61724 - Fax +39 051 758518
www.faac.it - www.faacgroup.com

ASSISTENZA IN ITALIA

SEDE
tel. +39 051 6172501
www.faac.it/ita/assistenza

FIRENZE
tel. +39 055 301194
filiale.firenze@faacgroup.com

MILANO
tel +39 02 66011163
filiale.milano@faacgroup.com

PADOVA
tel +39 049 8700541
filiale.padova@faacgroup.com

ROMA
tel +39 06 41206137
filiale.roma@faacgroup.com

TORINO
tel +39 011 6813997
filiale.torino@faacgroup.com

SUBSIDIARIES

AUSTRIA
FAAC GMBH
Salzburg - Austria
tel. +43 662 8533950
www.faac.at

FAAC TUBULAR MOTORS
tel. +49 30 56796645
faactm.info@faacgroup.com
www.faac.at

AUSTRALIA
FAAC AUSTRALIA PTY LTD
Homebush, Sydney - Australia
tel. +61 2 87565644
www.faac.com.au

BENELUX
FAAC BENELUX NV/SA
Brugge - Belgium
tel. +32 50 320202
www.faacbenelux.com

FAAC TUBULAR MOTORS
tel. +31 475 406014
faactm.info@faacgroup.com
www.faacbenelux.com

CHINA
FAAC SHANGHAI
Shanghai - China
tel. +86 21 68182970
www.faacgroup.cn

FRANCE
FAAC FRANCE
Saint Priest, Lyon - France
tel. +33 4 72218700
www.faac.fr

FAAC FRANCE - AGENCE PARIS
Massy, Paris - France
tel. +33 1 69191620
www.faac.fr

FAAC FRANCE - DEPARTEMENT VOLETS
Saint Denis de Pile - Bordeaux - France
tel. +33 5 57551890
www.faac.fr

GERMANY
FAAC GMBH
Freilassing - Germany
tel. +49 8654 49810
www.faac.de

FAAC TUBULAR MOTORS
tel. +49 30 5679 6645
faactm.info@faacgroup.com
www.faac.de

INDIA
FAAC INDIA PVT. LTD
Noida, Delhi - India
tel. +91 120 3934100/4199
www.faacindia.com

IRELAND
NATIONAL AUTOMATION LIMITED
Boyle,Co. Roscommon - Ireland
tel. +353 071 9663893
www.faac.ie

MIDDLE EAST
FAAC MIDDLE EAST FZE
Dubai Silicon Oasis free zone
tel. +971 4 372 4187
www.faac.ae

NORDIC REGIONS
FAAC NORDIC AB
Perstorp - Sweden
tel. +46 435 779500
www.faac.se

POLAND
FAAC POLSKA SP.ZO.O
Warszawa - Poland
tel. +48 22 8141422
www.faac.pl

RUSSIA
FAAC RUSSIA LLC
Moscow - Russia
tel. +7 495 646 24 29
www.faac.ru

SPAIN
CLEM, S.A.U.
S. S. de los Reyes, Madrid - Spain
tel. +34 091 358 1110
www.faac.

SWITZERLAND
FAAC AG
Altdorf - Switzerland
tel. +41 41 8713440
www.faac.ch

TURKEY
FAAC OTOMATİK GEÇİS SİSTEMLERİ SAN. VE TİC. LTD. ŞTİ.
Çağlayan, Kağıthane, İstanbul - Turkey
tel.+90 (0)212 – 3431311
www.faac.com.tr

UNITED KINGDOM
FAAC UK LTD.
Basingstoke, Hampshire - UK
tel. +44 1256 318100
www.faac.co.uk

U.S.A.
FAAC INTERNATIONAL INC
Rockledge, Florida - U.S.A.
tel. +1 904 4488952
www.faacusa.com

FAAC INTERNATIONAL INC
Fullerton, California - U.S.A.
tel. +1 714 446 9800
www.faacusa.com

732557-Rev.D